JUNG PUMPEN COMPLI

10 /21	10 /21	120/21		
300				
400	400			
0 /21	0 /21	20/21		
10/41	1 /41	2 /41	2 /21	3 /21
100 /21	100 /21	1020/21	1010/41	
1010/41	101 /41	102 /41	102 /21	103 /21
1210/41	121 /41	122 /41	122 /21	123 /21

DE O igi a -Be ieb a ei g

EN l c i Ma a

FR l c i de e ice

IT l i i e

NL Geb ik ha d eidi g

PL l kcja ek a acji

CZ N d

SK N d a e d k

HU e e i

RO Ma a de i i a e

ZH

EINSATZ

Die ecke fe ige F ka ie hebea age c i i d LGA Ba a ge f d eig e ich Hebe Ab e a T ie e - d U i a a age ie h i che Sch a e i de b iche Bei e g ge .

Die Beh e i d be f ba i ei e a H he 2 WS d ei e Da e g e 7 Tage .

Die S e e g i ich be f ba , abe i a e ge ch ach IP 44.

Bei ch if ige I a a i d be g g e Ei a e f die S e e g die Sch a f de ge de EMC-Rich i ie 2014/30/EU d i f de Ei a h iche Be eich ffe i che S e g g e geeig e . Bei A ch a ei I d ie e i e hab ei e I d iebe iebe i ei e S e g g a eige H ch a g a f a i .U. i eiche de S fe igkei ech e .

Bei Ei a de A age e die je eiige a i a e Ge e e, V ch if e ie die iche Be ge ei geha e e de , ie .B.

- Ab a e hebea age f die Geb de d G d ck e e g (.B. i E a EN 12050 d 12056)
- E ich e Niede a g a age (.B. i De ch a d VDE 0100)
- Siche hei d A bei i e (.B. i De ch a d Be SichV d BGR 500)
- Siche hei i ab a e ech i che A age (.B. i De ch a d GUV-V C5, GUV-R 104, GUV-R 126)
- E ek i che A age d Be ieb i e (.B. i De ch a d GUV-V A3)
- E i ch EN 60079-0, EN 60079-1, EN 60079-14, EN 60079-17 d EN 1127-1

Lieferumfang

- Beh e i P e( ) d K - f a ch f de Z a f
- Red ie ck DN 150 / DN 100 f c i 500 d 1000
- be chie ffe f die L f g (c i 1200 e a i che Ve bi d ge i Sche e)
- A ch f a ch f die D ck ei g e a i che Ve bi d g i Sche e f die D ck ei g
- S eckdich g(e) f die Ha b a e de ei e e Z a f DN 50
- Befe ig g a e ia f de Beh e
- R ck ch agk e f die D ck ei g (c i 300, 500, 1000 d 1200)
- S e e g (ich c i 300)

Betriebsart: Aussetzbetrieb S3, siehe techn. Daten

EINBAU

Die Hebea age a f ieb iche d f ei ehe d ei geba e de . Nebe d be a e bedie e de d a e de Tei e ei A bei a i de e 60 B ei e b . H he ha de ei .

L f g: Die L f g ei g be Dach gef h e de .

Z a f: Z a f de Beh e ei Sch a e chiebe a ge d e e - de .

D ck ei g: Hi e de R ck ch agk e i de D ck ei g ei ei e e Sch a e chiebe a ge d e e - de . I die R ck ch agk e ich Liefe fa g de A age e ha e , hie ei EN-ge f e R ckf e hi de e ei - geba e de .

Die D ck ei g i ei e Sch eife be die iche R ck a ebe e gef h e de .

F die E e g de A f e g a e i ei P e ehe .

ACHTUNG! A e Sch a be , die Befe ig g Ei e ei e Beh e die e , d fe i ei a D e e 6 N a ge ge e de .

Montage Behälter

De Schiebe Z a f (Z beh) ch ie e , Wa e ei h e d de M age e hi de .

compli 300. De ge ch e Z a f DN 100, ei ich de be i ei e L ch ge 102 de ei e S ich ge a de Ma kie g ff e d e g a e . De bei iege de K f a ch i de Sech ka ch a be Z a f cke befe ige .

Die Wi ke Ve a ke de A age a de Beh e ch a be d da die A age i d K f a ch bi A ch ag a f da Z a f h chiebe .

Da die Ma kie ge f die B de d be a eich e d b h e d de D be ei e e .

Je ka de K f a ch fe ge ge e de d die A age i de H ch a be d Scheibe B de e a ke e de .

Alle anderen compli. Hebea age i d K f a ch bi A ch ag a f da Z a f h chiebe d a ich e .

S ei ei iche Z a f DN 150 ge e de , e e i ei e L ch ge 152 a de Ma kie g ge ff e d e g a e e de . De S a da d a f da i d Ve ch e (Z beh) e ch e d da Ei cha i ea e fe ge eg e de .

Hinweis. Bei de c i 500 d 1000 ka de Z a f DN 150 a f DN 100 e i ge e de , e da bei iege de Red ie ck e i de K f a ch ei ge e i d.

Die Sech ka ch a be de K f a che fe a iehe .

L che f die B de befe ig g de Beh e a eich e d b h e .

H ch a be i Scheibe d D be e d ch die Beh e b h g ecke d fe ch a be .

ACHTUNG! Die Sch a be fe iehe , da ich de Beh e ich e f , be eh die Gefah ei e U dich igkei .

Bei de A age de Ba eihe c i 1200 i d de Beh e ich ch i ei ei iche Wi ke befe ig .

Montage Lüftung

Die L f g ei g i de be chie f fe DN 70 ech be Beh e a ch ie e d be Dach f h e .

Bei de c i 1200 de be e ech e S e 78 a de Ma kie g ab ch eide d e g a e . Je die L f g ei g i de e a i che Ve bi d g DN 70 a ch ie e d be Dach f h e .

Montage Druckleitung

A f de Abga g f a ch ie e :

1. R ck ch agk e (e ich Liefe fa g)
2. Ab e chiebe (Z beh)
3. A ch f a ch d
4. i e a i che Ve bi d g die D ck ei g a ch ie e d i ei e Sch eife be die iche R ck a ebe e f h e .

Anschluss DN 50 vertikel zur Notentsorgung

Die e A ch i d A ch ei e Ha b a e ge .

De S e a de Ma kie g i ei e L ch ge ff e d e g a e .

Die S eckdich g 58/50 ei e e .

Z a f h i A e - 50 d ch die S eckdich g i de Beh e chiebe . De Ab a d Beh e b de e 50 be age .

Die Ha b a e g g g ich a de Wa d befe ige , i d ei ge ch be e R h e bi de d da die D ck ei g de Ha b a e a ch ie e . A ch hie die D ck ei g i ei e Sch eife be die iche R ck a ebe e ge f h e de .

Zusatzzulauf DN 50 horizontal

Die gefe ig e N f de iche Z a f i ei e L chk ei ge ff e d die e g a e .

Die S eckdich g 58/50 ei e e .

Z a f h i A e - 50 d ch die S eckdich g i de Beh e chiebe .

ACHTUNG! Die A ch ei ge a de ied ige ei iche Z fe de c i

300 [illegible] g ich [illegible] ahe a [illegible] de A [illegible] age [illegible] ei [illegible] [illegible] ge a [illegible] e A [illegible] a b [illegible] ge [illegible] e e-he [illegible]. Die e B [illegible] ge [illegible] [illegible] i de [illegible] e ei e H he [illegible] 180 [illegible] i che R h [illegible] h e [illegible] d A f [illegible] e ebe [illegible] e habe [illegible]. D ch L f [illegible] e i [illegible] de A ch [illegible] ei [illegible] g ka [illegible] e Ab a [illegible] - b [illegible] e [illegible] d R [illegible] ck a [illegible] k [illegible] e [illegible]. U [illegible] die e [illegible] R [illegible] ck a [illegible] e [illegible] eide [illegible], i [illegible] die Z a f ei [illegible] g i ih [illegible] H ch [illegible] k [illegible] e [illegible] [illegible] e [illegible]. Die L f- [illegible] g ei [illegible] g ka [illegible] a [illegible] die Beh [illegible] e [illegible] f [illegible] g a ge ch [illegible] e [illegible] e de [illegible].

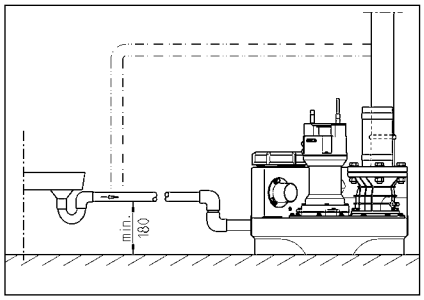

ELEKTRO-ANSCHLUSS

N [illegible] ei e E ek [illegible] fachk af [illegible] da f a [illegible] P [illegible] e, S [illegible] ecke [illegible] de S [illegible] e [illegible] g E ek [illegible] a bei [illegible] e [illegible] [illegible] e [illegible].

V [illegible] jede A bei [illegible] de Ne [illegible] ecke de A [illegible] age iehe [illegible] d iche [illegible] e [illegible], da die A [illegible] age [illegible] a [illegible] de e [illegible] Pe [illegible] - [illegible] e [illegible] ich [illegible] iede [illegible] e S [illegible] a [illegible] [illegible] gge e [illegible] e - de [illegible] ka [illegible].

ACHTUNG! Ne [illegible] ecke [illegible] ie [illegible] a i [illegible] Wa e ege [illegible]! E e [illegible] e ei d i ge de Wa e ka [illegible] S [illegible] ge [illegible] d Sch [illegible] de [illegible] h e [illegible].

Die je ei [illegible] g [illegible] ige [illegible] N [illegible] e [illegible] (.B. EN), a [illegible] - de [illegible] e ifi che [illegible] V [illegible] ch if [illegible] e [illegible] (.B. VDE) [illegible] ie die V [illegible] ch if [illegible] e [illegible] de [illegible] iche [illegible] Ve [illegible] - g [illegible] e [illegible] be [illegible] eibe i [illegible] d beach [illegible] e [illegible].

Be [illegible] ieb [illegible] a [illegible] g beach [illegible] e [illegible] (iehe T [illegible] e [illegible] - chi d)!

Die A [illegible] age [illegible] be [illegible] e [illegible] ei e Ni ea cha [illegible] g, die die P [illegible] e, abh [illegible] gig [illegible] Wa e [illegible] a d, ei [illegible] - b [illegible] . ab cha [illegible] e [illegible]. De Pie [illegible] de ei ge- ba [illegible] e [illegible] A [illegible] a [illegible] age ig a i ie [illegible], da ei e F [illegible] k [illegible] i [illegible] [illegible] g [illegible] ieg [illegible], a ch e [illegible] die [illegible] be gehe [illegible] d i [illegible].

I [illegible] die P [illegible] e [illegible] a [illegible] ge [illegible] de [illegible], i d ie d ch de Wick [illegible] g he [illegible] [illegible] a [illegible] e abge- cha [illegible] e [illegible]. V [illegible] d [illegible] Be ei [illegible] ige [illegible] de S [illegible] g - ache [illegible] de Ne [illegible] ecke ge [illegible] ge [illegible] e - de [illegible], da die P [illegible] e [illegible] [illegible] ach d [illegible] Abk [illegible] h e [illegible] e b [illegible] ig iede ei cha [illegible] e [illegible]. Ei e di ek e S [illegible] e d [illegible] g e f [illegible] g [illegible] ich [illegible].

Anlagen in Wechselstrom

Die A [illegible] age da f [illegible] a ei e [illegible] ch if [illegible] ig i [illegible] a ie [illegible] e S [illegible] eckd [illegible] e a [illegible] ge ch [illegible] e [illegible] e - de [illegible], die ich i ei [illegible] [illegible] cke e Ra [illegible] be - ha b de R [illegible] ck a [illegible] ebe e befi de [illegible] d [illegible] i [illegible] 16 A ([illegible] ge) abge iche [illegible] i [illegible].

Anlagen in Drehstrom

F [illegible] de E ek [illegible] a ch de Hebea [illegible] age i [illegible] e [illegible] ch if [illegible] ig i [illegible] a ie [illegible] e 5- [illegible] - ige CEE-S [illegible] eckd [illegible] e [illegible] ehe [illegible], die ich i ei [illegible] [illegible] cke e Ra [illegible] be ha b de R [illegible] ck- [illegible] a ebe e befi de [illegible] (3/N/PE~230/400 V).

ACHTUNG! A V [illegible] iche [illegible] ge [illegible] f [illegible] die A [illegible] a- ge i d [illegible] [illegible] ge Siche [illegible] ge [illegible] de A [illegible] a- [illegible] i [illegible] C-Cha ak [illegible] e i [illegible] ik ei [illegible] e [illegible] e [illegible].

Montage der Steuerung (nicht compli 300)

Die S [illegible] e e [illegible] g [illegible] i [illegible] [illegible] cke e R [illegible] e [illegible] be ha b de R [illegible] ck [illegible] a ebe e be [illegible] eibe [illegible] d da Geh [illegible] e [illegible] e [illegible] ge ch [illegible] e ha [illegible] e [illegible]. Die S [illegible] e e [illegible] g [illegible] g [illegible] g ich ei [illegible], da [illegible] i ei e K [illegible] e jede ei [illegible] g ich i [illegible]. H he L f [illegible] fe ch [illegible] igkei [illegible] d Sch [illegible] a e ka [illegible] die S [illegible] e e [illegible] g e [illegible] e [illegible].

Schaltniveaus

Die Ei - [illegible] d A cha [illegible] k [illegible] e i [illegible] d ab We k f [illegible] die S [illegible] a da d a fh he de je ei ige A [illegible] age ei ge [illegible] e [illegible].

S [illegible] e Sie ei e a [illegible] de e Z a fh he [illegible] h e [illegible], [illegible] e Sie de Ei cha [illegible] k [illegible] e de- fi ie e [illegible] (ich [illegible] ch [illegible] i 300), da e [illegible] e [illegible] . ei [illegible] R [illegible] ck a [illegible] Z a f k [illegible] e ka [illegible].

Die a [illegible] de e Scha [illegible] k [illegible] e f [illegible] A a [illegible] (+ 2 [illegible]) [illegible] d bei D [illegible] e a [illegible] age [illegible] S [illegible] e a [illegible] (+4 [illegible]) e de [illegible] de S [illegible] e e [illegible] g da [illegible] a [illegible] a [illegible] i ch e [illegible] eche [illegible] d e ge e [illegible].

Einschaltniveau neu festlegen (nicht compli 300)

Die A [illegible] age [illegible] be gehe [illegible] d [illegible] e [illegible], Ha [illegible] d- 0-A [illegible] a [illegible] ik-Scha [illegible] e a f "0" e [illegible] e [illegible]. Da J [illegible] ie [illegible] de Ei cha [illegible] k [illegible] e e f g [illegible] M [illegible] d "A [illegible] a ga e [illegible] e K1" ech [illegible] ei [illegible] ich i de S [illegible] e e [illegible] g. E [illegible] fe [illegible] e Sie [illegible] be ge- he [illegible] d die K a ich [illegible] abdeck [illegible] g de M [illegible] d [illegible].

A f d [illegible] A [illegible] a ga e [illegible] e befi de [illegible] ich d ei Le ch [illegible] di de [illegible], die [illegible] i [illegible] P1 - P2 - P3 be eich- [illegible] e [illegible] i d.

- P1 = Diag [illegible] ef [illegible] k [illegible] i [illegible],
- P2 e ch [illegible] e [illegible] = Wa e [illegible] a d ieg [illegible] be A cha [illegible] i ea abe [illegible] ch [illegible] e Ei - cha [illegible] i ea
- P3 e ch [illegible] e [illegible] = Wa e [illegible] a d ha [illegible] Ei - cha [illegible] i ea e eich [illegible]

F [illegible] e Sie de S [illegible] e beh [illegible] e bi U - [illegible] e ka [illegible] e de Z a f [illegible] i [illegible] Wa e . E da f P2 e ch [illegible] e [illegible], e [illegible] a ch P3 e ch [illegible] e [illegible], [illegible] ach ge ege [illegible] e de [illegible]:

D ehe [illegible] Sie die k ei e S [illegible] e ch a be [illegible] e - ha b [illegible] P1 ei [illegible] bi ei U [illegible] d eh [illegible] ge [illegible] Uh eige i [illegible]. Je [illegible] de Sch [illegible] e [illegible] Beh [illegible] e [illegible] e de A cha [illegible] k [illegible] a che [illegible] d iede a f ch [illegible] e a e [illegible]. Le ch [illegible] e [illegible] P3 [illegible] e [illegible] ch, d ehe [illegible] Sie die S [illegible] e ch a be ei e ei e e U [illegible] d eh [illegible] g [illegible] Uh eige i [illegible] d [illegible] a che [illegible] de Sch [illegible] e e [illegible] e [illegible] e [illegible].

Die e V [illegible] ga [illegible] g [illegible] a [illegible] ge iede h e [illegible] bi P3 [illegible] ich [illegible] eh e ch [illegible] e [illegible], da [illegible] d ehe [illegible] Sie die S [illegible] e ch a be [illegible] ich [illegible] ig [illegible] Gege h ei- ge i [illegible] [illegible] ck, bi P3 ge ade iede e ch- [illegible] e. De Ei cha [illegible] k [illegible] i [illegible] ge [illegible] e [illegible].

Alarmanlage

S [illegible] g [illegible] e d [illegible] ge [illegible] e f [illegible] ge [illegible] [illegible] h [illegible] [illegible] i ch a a ch ak [illegible] i ch. Die e ie [illegible] [illegible] ig [illegible] e [illegible] abh [illegible] gige A a [illegible] a [illegible] age [illegible] e de [illegible] M [illegible] [illegible] - ge de P [illegible] e [illegible] ([illegible] e LED, [illegible] ich [illegible] bei AD 00 [illegible] d c [illegible] [illegible] i 300). G eich ei [illegible] ig e [illegible] [illegible] ei [illegible] i [illegible] e- g ie [illegible] e ak [illegible] i che A a [illegible] . Die ak [illegible] i che Sig a [illegible] [illegible] ich [illegible] d ch S [illegible] [illegible] g be ei [illegible] i- g [illegible] g de ge e e ab [illegible] e [illegible].

E [illegible] de M [illegible] age [illegible] [illegible] kei e ak [illegible] i che K [illegible] [illegible] e de S [illegible] e d [illegible] g [illegible] , [illegible] ka [illegible] da A a [illegible] ig a [illegible] be de [illegible] [illegible] e [illegible] ia f eie [illegible] K [illegible] - [illegible] ak [illegible] (K [illegible] e 40 [illegible] d 41) a f de P [illegible] i e (c [illegible] [illegible] i 300 [illegible] S [illegible] ecke) ei [illegible] e gef [illegible] h [illegible] e - de [illegible]. De Sch ie e k [illegible] ak [illegible] de S [illegible] e [illegible] - [illegible] g i [illegible] a [illegible] i [illegible] 5A / 250V AC be a [illegible] ba . De K [illegible] ak [illegible] ff [illegible] e [illegible] ach S [illegible] [illegible] g be ei [illegible] ig [illegible] g.

Akku für Alarmanlage (nicht compli 300)

Die A a [illegible] ei [illegible] ich [illegible] g i [illegible] e ie [illegible] [illegible] ig [illegible] e [illegible] - abh [illegible] gig d.h. [illegible] Fa e ei e S [illegible] a fa ka [illegible] kei H ch a e a a [illegible] a ge [illegible] e - de [illegible]. U [illegible] die A a [illegible] a [illegible] age a ch bei S [illegible] - a fa f [illegible] k [illegible] i [illegible] f hig ha [illegible] e [illegible] [illegible] ei [illegible] Akk ei ge e [illegible] e de [illegible]. K a ich [illegible] [illegible] ff [illegible] e [illegible]. Akk [illegible] A [illegible] ch c [illegible] a ch ie [illegible] e [illegible] d [illegible] [illegible] ge ehe [illegible] P a [illegible] a f de P [illegible] i e [illegible] i [illegible] d [illegible] [illegible] ha [illegible] de [illegible] Kabe bi de befe [illegible] ige [illegible]. Die e ka [illegible] die A a [illegible] a [illegible] age bei Da e a a [illegible] f [illegible] ca. 1 S [illegible] de [illegible] i [illegible] S [illegible] e [illegible] ge [illegible].

Nach Ne [illegible] a [illegible] [illegible] g iede keh i d de Akk a [illegible] a [illegible] ich iede a fge ade [illegible]. Ei [illegible] ade [illegible] e Akk i [illegible] i [illegible] e ha b [illegible] ca. 24 S [illegible] de [illegible] be [illegible] ieb be ei [illegible], V ad [illegible] g i [illegible] ach ca. 100 S [illegible] de [illegible] e eich [illegible].

F [illegible] k [illegible] i [illegible] f hig keit [illegible] de Akk [illegible] ege [illegible] [illegible] ig [illegible] [illegible] fe ! Da die Ne [illegible] a [illegible] [illegible] g ab cha [illegible] e [illegible] d ei e H ch a e [illegible] e d [illegible] g a [illegible] e [illegible]. Die La [illegible] ke de ak [illegible] i che A a [illegible] da f ich [illegible] be [illegible] eh e e Mi [illegible] e [illegible] ich [illegible] e [illegible] [illegible] ich e - i [illegible] ge [illegible]. Die Lebe [illegible] da e [illegible] ieg [illegible] bei ca. 5 Jah- e [illegible]. Ei [illegible] e [illegible] da [illegible] a f d [illegible] Akk [illegible] [illegible] ie e [illegible] d [illegible] ach 5 Jah e [illegible] [illegible] g ich a [illegible] ech e [illegible].

N [illegible] 9V-Akk [illegible] e e de [illegible]! Bei Ve- e d [illegible] g [illegible] [illegible] T [illegible] cke ba [illegible] e ie [illegible] be- [illegible] eh [illegible] E [illegible] i [illegible] gefah !

Betriebsstundenzähler

O [illegible] i [illegible] a ka [illegible] ei [illegible] Be [illegible] ieb [illegible] de [illegible] h e i [illegible] die S [illegible] e e [illegible] g ei [illegible] ge e [illegible] e de [illegible] (ich [illegible] c [illegible] - [illegible] i 300). Hie die A [illegible] ch [illegible] e de Be [illegible] ieb - [illegible] de [illegible] h e a f ca. 8 [illegible] k [illegible] e [illegible] d a f de P [illegible] i e [illegible] P [illegible] BSZ i [illegible] die 4 B ch e [illegible] ecke [illegible]. Fa [illegible] ach d [illegible] e [illegible] e [illegible] Ei cha - [illegible] de A [illegible] age kei e A [illegible] eige e f [illegible] g [illegible] de Be [illegible] ieb [illegible] de [illegible] h e [illegible] 180 ged eh [illegible] e de [illegible].

Externer Alarmsummer (Zubehör)

K a ich[illegible] de S[illegible]e e [illegible] g ff[illegible]e[illegible].

A[illegible] de[illegible] K[illegible] e[illegible] "S+" [illegible] d "S-" ka[illegible] ei[illegible] [illegible] iche, e[illegible]a a[illegible]e ak [illegible]i che 12 VDC-Sig[illegible]a gebe [illegible] i[illegible] ei[illegible]e S[illegible] a f[illegible] [illegible] e [illegible] a [illegible] 30 [illegible] A a[illegible]ge ch[illegible] e[illegible] e de[illegible]. De i[illegible]e[illegible] e A a[illegible] [illegible] e ka[illegible] ah ei e ei[illegible]-[illegible] de a ge cha[illegible]e[illegible] ei[illegible].

Bei de c[illegible] [illegible]i 300 ka[illegible] ei[illegible] [illegible]e[illegible] abh[illegible] i-ge A a[illegible] a Z beh [illegible] [illegible]ie[illegible] e de[illegible], ei[illegible] M[illegible]age[illegible] cke i[illegible] Beh[illegible]e [illegible] ha[illegible] de[illegible].

Bei Doppelanlagen: Externe Blitz- oder Warnleuchte (Zubehör)

230V[illegible] Le ch[illegible]e[illegible] a [illegible] 1A) a[illegible] K[illegible] e N [illegible] d 41 a[illegible] ch ie[illegible] e[illegible].

I[illegible] ie[illegible]e D ah[illegible]b[illegible] cke [illegible] K[illegible] e U[illegible] ach 40 ege[illegible]. De S[illegible] k ei i[illegible] d ch F1 abge-iche[illegible].

Die S[illegible]eckb[illegible] cke "BRX2" ie f[illegible] g[illegible] ei[illegible]e e[illegible]:
B i[illegible] e ch[illegible]e: abge[illegible]ge[illegible] (=)
Wa[illegible] e ch[illegible]e: a fge[illegible]eck[illegible] (_ _ _).

BETRIEB

Probelauf und Funktionsprüfung

1. Rei[illegible]ig[illegible] g decke [illegible] Beh[illegible]e ff[illegible]e[illegible].
2. Schiebe i[illegible] Z a f- [illegible] d D ck ei[illegible] [illegible] g ff-[illegible]e[illegible].
3. A[illegible] age a[illegible] S[illegible]a[illegible] [illegible] g ege[illegible], D ehfe d ich-[illegible] g a[illegible] eige beach[illegible]e[illegible].
4. Beh[illegible]e bi [illegible] Ei[illegible] cha[illegible] i ea [illegible] e[illegible].
5. P[illegible]e cha[illegible]e[illegible] je[illegible] ei[illegible] [illegible] d e[illegible] ee[illegible] de[illegible] Beh[illegible]e. P[illegible] [illegible] ga[illegible] g d ch die Rei[illegible]i-g[illegible] g ff[illegible] g be[illegible] bach[illegible]e[illegible].
6. Sch[illegible] e de Ni ea -Scha[illegible] g [illegible] Ha[illegible] d a[illegible] g [illegible] be de[illegible] Ei[illegible] cha[illegible] k[illegible] hi[illegible] a a[illegible] hebe[illegible], bi die A a[illegible] a[illegible] age a [illegible].
7. Rei[illegible]ig[illegible] g ff[illegible] g iede[illegible] i[illegible] Decke [illegible] d Dich[illegible] g e ch ie[illegible] e[illegible].
8. A[illegible] ha[illegible] d [illegible] eh e e[illegible] Scha[illegible] [illegible]e e[illegible] die Dich[illegible]igkei[illegible] de Beh[illegible]e, de A[illegible] a[illegible] e[illegible] [illegible] d de R[illegible] h ei[illegible] [illegible] ge[illegible] fe[illegible].

Automatikbetrieb

De A[illegible] a[illegible]ikbe[illegible] ieb i[illegible] de [illegible] a e A[illegible] a-ge[illegible] be[illegible] ieb. Hie [illegible] de W[illegible] cha[illegible]e i[illegible] die S[illegible]e [illegible] g "A[illegible] a[illegible]ik" geb ach[illegible] e de[illegible]. D ch die i[illegible]eg ie[illegible]e Ni ea cha[illegible] g i d die P[illegible]e e[illegible] 43 195.022 85 [illegible] g i d

k a e 22 bi 46 e e de , .B. N ESSO de DTE 22, DTE 24, DTE 25 M bi .

Die F e ge be g 380 bei de M - iC -P e UC 08/2 M d 25/2 M d 1000 bei de M iF ee-P e 25/2 BW d 35/2 BW.

Die [illegible] de a gegebe- e e ge gef e de . Ei be f e f h Ze g de P e.

Kontrolle des Schneidspaltes

(Gi f Sch eid ad e). Die Geh - e ch a be de P e ie die Ve bi - d g - d Befe ig g ch a be de l - a a i i d a f fe e Si k ie e - d gegebe e fa ach iehe .

Bei ab eh e de F de iehe .

[illegible]

Qualification and training of personnel

[illegible]

SAFETY INSTRUCTIONS

[illegible]

ATTENTION!

[illegible]

AREAS OF APPLICATION

The ead c ec c i e age if i g a i a e LGA ce ified a d a e i ab e f he di a f a e a e f i e a d i a , a d d e ic a e a e c ai i g he a ie .

The a k ca i h a d e i a de h f e ha 2 f a e a d a e i e i d f 7 da .

The c i ca i h a d e - i , b i a h f i acc da ce i h IP 44.

If i a ed i c ia ce i h he eg a- i a d ed e , he hi c i ee he ec i e e i e f he EMC Di ec i e 2014/30/EU a d i i - ab e f d e ic e a d c ec i a e f he g id. Whe c ec ed a i d ia ai i hi a i d ia e a i i h e ided b a c a - high- age a f e , i - fficie i e fe e ce ha be e ec ed.

Whe i g he , he e e a a i a a , eg a i a d a i be adhe ed , f e e:

- Se age di a i f b i di g a d g d d ai age (e.g. EN 12050 a d 12056 i E e)
- I a a i f age (e.g. VDE 0100 i Ge a)
- Safe a d ki g a e ia (e.g., Be- SichV a d BGR 500 i Ge a)
- Safe i a e a e (e.g., GUV-V C5, GUV-R 104 a d GUV-R 126 i Ge - a)
- E ec ica a d e a i g e c- e (e.g., GUV-V A3 i Ge a)
- E i ec i EN 60079-0, EN 60079-1, EN 60079-14, EN 60079-17 a d EN 1127-1

Scope of supply

- Ta k i h ( ) a d c f a ge f i e
- Red ce DN 150 / DN 100 f c i 500 a d 1000
- S cke e f e i a i e (c i 1200 f e ibe c ec i i h h e c)
- C ec i f a ge f e e e
- F e ibe c ec i i h h e c f he e e e
- P g-i ea ( ) f he dia h a ha d addi i a DN 50 i e
- Fi i g a e ia f a k
- N - e a e f he e e e (c i 300, 500, 1000 a d 1200)
- C (c i 300)

Mode of operation: intermittent operation

e back- , he i e be e ed a highe . The e a e ca be c ec ed he a k e a .

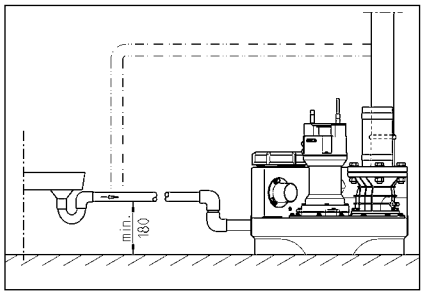

ELECTRICAL CONNECTION

O a ified e ec ica k he he c .

Bef e ca g a k, he ai g a de e ha he e g, hi ca be ched agai b a e e.

ATTENTION! Ne e he ai g ! If a e ge he g, hi ca ca e a f c a d age.

The da d a icab e i each ca e (e.g. EN), he c - ecific eg a (e.g. VDE i Ge a), a d he eg a f he ca k e a be b- e ed.

Ob e e he a g age (ee he e a e).

The ha e a e e c e ha ch- e he a d ff de d g he e - e f he a e . A i eg a ed a a be if he e i a a f c , e e if hi i a .

If he a e heaa , he c d e he i di g he a . Af e he he a ha ched ff he , he ai g bef e ed i g he fa , i ce he de ice ca ch e f agai a a ica if he e i i c - ec ed. A di ec a f c i e age i ge e a ed.

Alternating current (AC) units

O c ec he e ec ica cke ha ha e bee i a ed e e i a d , ab e he back e e , i acc da ce h he eg a , a d a e fi ed h ea a 16 A (de a) f e.

Three-phase current units

F he e ec ica c ec i f he e age di a , a fi e e CEE e cke i e i ed. Thi be ca ed i a d ab e he back e e (3/N/PE~230/400 V).

Attention! O -b f e a a ic f e h C cha ac e i ic a e be ed a e-f e f he

Installing the control unit (not compli 300)

O e a e he c i d ab e he back e e , a d kee he h i g c ed a a e . The c be ea i acce ib e e ab e i be checked a a e. High h id a d c de a ca de he c !

Switching levels

The ch- a d ch- ff i ha e bee fac e f he a da d i e heigh f he a i .

If e ec a diffe e i e heigh, he e edefi e he ch- i c - i 300) a he i e back e e a c- c i he i e.

The he ch i g i f he a a (+2) a d, i he ca e f d e , eak ad (+4) a e he e e a a a ica b he c i .

Redefining the switch-on level (not compli 300)

Sh d he a i a d e he Ma a -0-A a ic ch 0 . The ch- i ca be adj ed ia he a a- g e e a K1 d e he igh- ha d ide i he c i . R e he a e e c e f he d e a i .

O he a a g e e a he e a e h ee LED , abe ed P1, P2 a d P3.

- P1 = Diag i f c i
- P2 = Wa e e e highe ha ch- i g ff heigh b i e ha ch- i g heigh
- P3 = Wa e e e ha eached ch- i g e e

Fi he c ec i cha be h a e he b edge f he i e i g. O P2 h d be . If P3 i a , a e adj e be ade.

T he a adj i g c e be ea h P1, gi i g e f c ck i e. The ake he f a ch, e ge be he ch- ff i he cha be a d a f a agai . If P3 i i , gi e he ad- j i g c e a he f c ck i e a d e ge he f a ch agai .

Re ea hi ced e i P3 i ge , he he adj i g c e ca ef back i he a ic ck i e di ec i i he e ac i he e P3 igh agai . The ch- i ha he bee e.

Alarm system

Ma f c i e age a e gi e b h ica a e a ac ica . The da d a ai -de e de a a - fa i he e ed LED, AD 00 c i 300). A he e a b i- i ac ic a a d . Thi ac ic ig a ca be ed ff b ed i g he fa b a deac i a i g .

If a ac ic ig a d be i a e ia e a he i a a i ie i e i , a a a

ig a ca be e a ed ia he e ia -f ee c ac a 40 a d 41) he ci b a d i he g i he ca e f c i 300). The e ia -f ee c ac f he ce a i ed a a ca be aded h a a f 5 A / 250 VAC. The c ac e a f e he fa ha bee edied.

Battery pack for alarm system (not compli 300)

The a a de ice i ai -de e de i a da d e i , i.e. i ib e ig- ge a high- a e a a i he e e fa - e fai e. T e ab e he a a de ice k e e if he e i a e fai e, a echa ge- ab e a e ack be ed. O e he a e a e c e . C ec he a e ack he c ec i c i a d e he e i g cab e ie a ach i he i e ded i (G1) he PCB. The a e ack ca e he a a h i e f ab 1 h i ca e f e a e a a .

Af e e f he ai age, he ba- e ack i cha ged agai a a ica . A e a i ead f e a i h i a 24 h . i f cha ged af e ab 100 h .

Check he f c i f he a e ack a eg a i e a ! T d , di c ec he f he ai a d igge a high- a e a a . The e f he ac ic ig a bec e ig ifica ie e e a e i d f e e a a i e . The e ice ife i ab 5 ea . N e he i e i da e he a e ack a d af e fi e ea he a e ack h d be e aced a a eca a a ea e.

O e a 9V echa geab e a e ! If d -ce a e ie a e ed he e i a da ge f e i !

Time meter

A e i a e e ca be fi ed i he c i (c i 300). T d , h e he c ec f he e e a 8 a d i e he i he f cke a ca i BSZ he i ed ci b a d. If he e i e e i dica i af e ch i g he agai , a e he e e h gh 180 .

Shutting down the internal alarm buzzer

N c i 300. R e he ea ed j e (BRX/BRX1). T e e he j e f ge- i g a ach i a f he e c ec .

External alarm buzzer (accessory)

O e he a e a e c e he c i .

A addi i a e a e ac ic 12 VDC ig- a a e h a c e c f he ha 30 A ca be c ec ed e i a S+ a d S- . The i e a a b e ca e he be ched ff.

I ́ ىhe ca e ́ f c ́ ىri 300, a ىai ́ -i ́ de ىe ́ -
de ́ ى a a ىde ice ca ́ be fىed a a ́ acce -
́ . The e i a ىi ́ ى g ba e ́ ىhe ى a ́ k

dec ea e [illegible] bec[illegible] e b[illegible]cked), [illegible] be checked f[illegible] ea b a[illegible] aced if[illegible]ece a[illegible].

U[illegible]g a [illegible]ab e[illegible], e.g. fee e ga ge, [illegible] c[illegible]g c ea a[illegible]ce be[illegible] ee[illegible] [illegible] c[illegible]g [illegible] a[illegible] [illegible] c[illegible]g [illegible] ca[illegible] be[illegible] ea ed. A c[illegible]g c ea a[illegible]ce f[illegible] e 0.2[illegible] be ed ced.

Adjustment of the cutting clearance

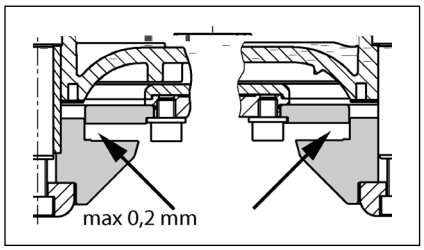

1. B[illegible]ck [illegible] c[illegible]g [illegible] [illegible]h a[illegible]ece [illegible]f [illegible] a[illegible] [illegible] c e [illegible] ce[illegible] a he [illegible]ckes c e .
2. Take [illegible]ff [illegible] c[illegible] [illegible]e i[illegible]ece, [illegible] c[illegible]g [illegible] a[illegible] adj[illegible]g a he a[illegible] [illegible]ach [illegible] c[illegible] [illegible]e i[illegible]ece a[illegible] c[illegible]g [illegible] agai[illegible].
3. B[illegible]ck [illegible] c[illegible]g [illegible] a[illegible] [illegible]igh [illegible] agai[illegible] [illegible]h [illegible] he [illegible]ckes c e [illegible]igh [illegible]g [illegible] e 8 N[illegible]).
4. Check [illegible] f eed[illegible] [illegible] f[illegible] [illegible] e[illegible] f [illegible] c[illegible]g [illegible] a[illegible] [illegible] c[illegible]g c ea a[illegible]ce agai[illegible] a[illegible] 0.2[illegible]).

If [illegible] c[illegible]g c ea a[illegible]ce i[illegible] big, a f[illegible] adj[illegible]g a he [illegible] be [illegible] ed. S[illegible] 1-4[illegible] be [illegible]ed.

QUICK TIPS FOR REMEDYING FAULTS

The unit isn't working

Check [illegible] ai[illegible] [illegible] age, [illegible] he f e a[illegible] [illegible] he g[illegible] [illegible] d fa[illegible] ci c[illegible]i[illegible]e [illegible]e. Re[illegible]ace defec[illegible]i e f e [illegible] [illegible]h f e [illegible]h [illegible] he [illegible] e [illegible] i[illegible] a a e! If [illegible] he f e[illegible] igge agai[illegible], ca a[illegible] a ified e ec[illegible]icia[illegible] [illegible] c[illegible] e [illegible] e ice.
The i[illegible]e a 2 A g a [illegible] be f e (de a) f [illegible] he 230/12V c[illegible] [illegible] a[illegible] f[illegible] e, [illegible] [illegible] c[illegible] ac[illegible] a[illegible] [illegible] he 230V AC[illegible] e [illegible] a e fa[illegible]. Re[illegible]ace defec[illegible]i e f e [illegible] [illegible]h f e [illegible]h [illegible] he [illegible] e [illegible] i[illegible] a a e!
If [illegible] he[illegible] ai[illegible] cab e i d[illegible] aged, [illegible] a [illegible] be [illegible]aced b [illegible] he[illegible] a[illegible] fac[illegible] e .
If [illegible] he f[illegible] a[illegible] [illegible]ch i[illegible] b[illegible] [illegible]ed, c[illegible] e [illegible] he i[illegible] [illegible] h[illegible]-[illegible]ff a e, [illegible] [illegible] he[illegible] ai[illegible] e a[illegible]ce c[illegible] e a[illegible] d c ea [illegible] he b[illegible]ckage.

If the alarm is triggered and the unit does not work:

The [illegible] he[illegible] [illegible] a[illegible] [illegible] he[illegible] [illegible] i[illegible] di[illegible]g [illegible] a ha e [illegible]ched [illegible]ff [illegible] he [illegible] beca e [illegible] he [illegible] [illegible] i[illegible] b[illegible] [illegible]ed. I[illegible] hi ca e, c[illegible] e [illegible] he h[illegible]-[illegible]ff a e a[illegible] he i[illegible], d ai[illegible] he [illegible] a[illegible] k, [illegible] [illegible] he[illegible] ai[illegible] g, [illegible] [illegible] e, [illegible] he [illegible] [illegible] [illegible] d e, a[illegible] d c ea [illegible] he b[illegible]ckage.

Decreased pumping performance

Check [illegible] ha[illegible] he h[illegible]-[illegible]ff a e i[illegible] he[illegible] e - e[illegible] e i f [illegible] e[illegible].
If [illegible] he[illegible] e [illegible] e i b[illegible]cked, f h a[illegible] e [illegible] h[illegible] gh [illegible] he[illegible] e [illegible] e[illegible] c ea [illegible].
If [illegible] he[illegible] - e[illegible] a e i b[illegible]cked, [illegible] [illegible] he[illegible] e [illegible] e a[illegible] d c ea [illegible] he [illegible] - e[illegible] a e.
If [illegible] he e[illegible] i a[illegible] [illegible] [illegible] i b[illegible]cked, c ea[illegible] he e[illegible] i a[illegible] h[illegible] e [illegible] ha[illegible] ead f[illegible] [illegible] he [illegible] [illegible] a[illegible] k a[illegible] d check [illegible] he d i ed h[illegible] e .
If [illegible] he [illegible] [illegible] k [illegible] a [illegible] he[illegible] [illegible] a[illegible] [illegible] [illegible] g, b[illegible] bec[illegible] e e [illegible] d[illegible] a d [illegible] he e[illegible] d, [illegible] he[illegible] a[illegible] a ified e ec[illegible] icia[illegible] [illegible] e[illegible] edefi[illegible] e [illegible] he [illegible] [illegible]ch-[illegible]ff [illegible] i[illegible] he c[illegible] - [illegible] [illegible].

Indicator "Drehfeld falsch" (Wrong rotating field) lights up

Mai[illegible] [illegible] ha e e[illegible] e[illegible] ce i [illegible] g[illegible] [illegible] ha e i ab e[illegible] - h[illegible] [illegible] e [illegible] ab e[illegible] [illegible] de i e . The[illegible] ai[illegible] c[illegible] ec[illegible]i[illegible] [illegible] be c[illegible] ec[illegible]ed b[illegible] a ified e ec[illegible] icia[illegible] [illegible] .

Indicator "Störung Pumpe" (Pump failure) lights up (not compli 300)

The [illegible] [illegible] i[illegible] ec[illegible]ed b a[illegible] i[illegible]eg a[illegible]ed ci - c[illegible] b eake hich [illegible]che [illegible]ff [illegible] he [illegible] [illegible] if [illegible] e [illegible] ad [illegible] if [illegible] he e i a[illegible] e ec[illegible] iq[illegible] [illegible] fa[illegible]. Af[illegible] e hi ha bee[illegible] igge ed, [illegible] he c[illegible] [illegible] [illegible] ha[illegible] be[illegible] e ed b[illegible] a ified e ec[illegible] icia[illegible] i[illegible] de[illegible] [illegible] e [illegible] he e[illegible] b[illegible] [illegible].

Indicator "Hochwasser" (High water) lights up (not compli 300)

Wa[illegible] e e i[illegible] he[illegible] a[illegible] k[illegible] high beca e [illegible] f[illegible] [illegible] [illegible] f[illegible] a[illegible] e[illegible] e[illegible] e i e i f[illegible] .
R[illegible] e a[illegible] b[illegible] [illegible] i[illegible] he[illegible] [illegible] [illegible] e [illegible] e[illegible] e a d/ e[illegible] i[illegible] a[illegible] he[illegible] e[illegible] e - i e i f[illegible] .

LED P1 on the analogue evaluator is permanently lit up (not compli 300)

The e i a fa[illegible] i[illegible] he e e[illegible] [illegible] i[illegible] g. Ca[illegible] c[illegible] e [illegible] e ice.
The e i [illegible] a[illegible] e[illegible] i[illegible] he[illegible] a[illegible] k. Fi[illegible] [illegible]h a[illegible] a [illegible] [illegible] f a[illegible] e .
N[illegible] e: If [illegible] he LED igh[illegible] [illegible] b ief a[illegible] e [illegible] he [illegible] [illegible] g[illegible] e a[illegible], [illegible] hi i[illegible] a ig[illegible] f a [illegible] a f[illegible] .

Pump "snores" and does not switch itself off (not compli 300)

The [illegible]ch-[illegible]ff [illegible] i[illegible] f[illegible] he [illegible] i[illegible] [illegible] .

U[illegible] c e [illegible] he [illegible] h ee [illegible] g c e [illegible] [illegible] he e - e[illegible] [illegible] i g a[illegible] he f[illegible] f[illegible] he c[illegible] ec[illegible]g [illegible] a[illegible] k. B ca ef [illegible] a[illegible] g[illegible] [illegible] he igh[illegible] he [illegible]ch-[illegible]ff [illegible] i[illegible] ca[illegible] be e[illegible] a highe e e . Re[illegible] igh[illegible] e[illegible] he c e . The [illegible]ch-[illegible]ff e e i eached d i g [illegible] [illegible] g he[illegible] [illegible] he LED2 g e [illegible] ff.

Attention! [illegible] a a[illegible] be[illegible]ece a[illegible] e-adj[illegible] he [illegible]ch-[illegible] e e [illegible] ea e efe[illegible] [illegible] he ec[illegible] . Redefi[illegible] g he [illegible]ch-[illegible] e e).

N[illegible] e: If [illegible] he [illegible] [illegible] a [illegible] [illegible] i g [illegible] i e i [illegible] e - cei ed a i[illegible] i e, [illegible] he [illegible]ch-[illegible]ff [illegible] i[illegible] ca[illegible] a[illegible] be e[illegible] a highe e e i[illegible] hi a .

CONSIGNES DE SÉCURITÉ

ATTENTION!

Qualification du personnel

Travailler en étant soucieux de la sécurité

Consignes de sécurité pour l‘exploitant/ l‘utilisateur

Consignes de sécurité pour le montage, les travaux d‘inspection et de maintenance

Transformation et fabrication de pièces détachées sans concertation préalable

Formes de service interdites

Consignes concernant la prévention des accidents

UTILISATION

Le [illegible] de [illegible] e e age [illegible] [illegible] a [illegible] e f ca e [illegible] [illegible] [illegible] b a che [illegible] a ce ifica [illegible] LGA [illegible] de de c [illegible] [illegible] [illegible] ie [illegible] a e e age de ea [illegible] e e [illegible] a ce de [illegible] ie e [illegible] [illegible] ai [illegible] e de ea [illegible] e [illegible] e [illegible] e a ec e [illegible] [illegible] e [illegible] habi [illegible] e e .

Le c [illegible] ec [illegible] [illegible] [illegible] e ib e a ec [illegible] e ha [illegible] e [illegible] de 2 [illegible] CE [illegible] [illegible] e d e de 7 j [illegible] a [illegible] .

L [illegible] i de c [illegible] a de [illegible] e [illegible] [illegible] e ib e [illegible] ai e [illegible] [illegible] g e c [illegible] e e [illegible] jec [illegible] d e a e [illegible] IP 44.

P [illegible] e [illegible] a [illegible] [illegible] g [illegible] e [illegible] ai e e [illegible] e [illegible] i a [illegible] c f [illegible] e, [illegible] i de c [illegible] a de [illegible] d a [illegible] e [illegible] ce de [illegible] ec [illegible] de a di ec i e EMC 2014/30/EU e c [illegible] ie [illegible] [illegible] e [illegible] e [illegible] e [illegible] habi [illegible] [illegible] i di id e a ec [illegible] e c [illegible] [illegible] e e a ec i e [illegible] b ic. E [illegible] ca de b a ch [illegible] e [illegible] [illegible] ea [illegible] i d [illegible] ie a ei d [illegible] e e [illegible] [illegible] a [illegible] i d [illegible] ie e a ec [illegible] e a [illegible] e [illegible] a [illegible] ec i e e [illegible] e a ce d [illegible] [illegible] e [illegible] a f [illegible] a e ha [illegible] e [illegible] [illegible], i fa [illegible] a e d e, e [illegible] e-a [illegible] e, [illegible] e i - [illegible] a ce de [illegible] e [illegible] ba [illegible] [illegible] ffi a e.

L [illegible] de [illegible] i a [illegible] de [illegible] e , i e [illegible] ce - ai e d b e e e diff e [illegible] e [illegible] i [illegible] a [illegible] - [illegible] a e , e di ec i e ai [illegible] e e di [illegible] i - [illegible] [illegible] ca e , c [illegible] e [illegible] a [illegible]

- Le [illegible] e de e e age de ea [illegible] e [illegible] a ai i [illegible] e [illegible] de [illegible] e ai [illegible] e de b [illegible] e [illegible] a [illegible] e E [illegible] e EN 12050 e 12056)
- La a i a [illegible] i d [illegible] a [illegible] [illegible] ba e [illegible] e - [illegible] [illegible] a [illegible] e A [illegible] ag e VDE 0100)
- S c [illegible] e [illegible] [illegible] e [illegible] [illegible] a [illegible] e A e- [illegible] ag e a [illegible] g [illegible] e [illegible] a c [illegible] da e e [illegible] e [illegible] e "Be SichV" e BGR 500)
- S c [illegible] da e [illegible] e de [illegible] ech [illegible] e d ea [illegible] e [illegible] [illegible] a [illegible] e A [illegible] ag e GUV-V C5, GUV-R 104, GUV-R 126)
- I [illegible] a [illegible] i [illegible] ec [illegible] e e [illegible] a [illegible] ie [illegible] [illegible] a [illegible] e A [illegible] ag e GUV-V A3)
- P [illegible] ec [illegible] a [illegible] id f ag a [illegible] e EN 60079-0, EN 60079-1, EN 60079-14, EN 60079-17 e EN 1127-1

Contenu de la livraison

- C [illegible] ec [illegible] e a ec [illegible] [illegible] e( ) e b ide de e - age [illegible] [illegible] e e
- R d c [illegible] e DN 150 / DN 100 [illegible] c [illegible] [illegible] i 500 e 1000
- Ma ch c i a [illegible] a a [illegible] (c [illegible] - [illegible] i 1200 j c [illegible] a [illegible] e a ec c ie)
- B ide de acc d [illegible] e [illegible] [illegible] a c d [illegible] e de ef [illegible] e
- J c [illegible] a [illegible] e a ec c ie [illegible] a c d [illegible] e de ef [illegible] e
- J [illegible] ( ) [illegible] b [illegible] ( ) [illegible] a [illegible] [illegible] [illegible] a- e e dia [illegible] h ag [illegible] e [illegible] e e [illegible] - [illegible] e [illegible] ai e DN50
- Ma ie de fi [illegible] [illegible] e c ec e
- C [illegible] e [illegible] [illegible] [illegible] a c d [illegible] e de e- f [illegible] e (c [illegible] i 300, 500, 1000 e 1200)
- U [illegible] de c [illegible] a de [illegible] c [illegible] i 300)

Mode de fonctionnement : Service discontinu S3, cf. caractéristiques techniques

INSTALLATION

Le [illegible] e de e e age d [illegible] e [illegible] a ec [illegible] e [illegible] ec [illegible] c [illegible] e e [illegible] e e [illegible] - ca e ai [illegible] e [illegible] e ib e. l e [illegible] ce ai e de [illegible] [illegible] e [illegible] ace de [illegible] a ai de 60 [illegible] [illegible] [illegible] . e a ge e e ha e a [illegible] e a - de de [illegible] e e [illegible] ce [illegible] i i e e e e i.

A [illegible] : e c d i d a [illegible] d [illegible] e di i- g a -de d i ea d [illegible].

A e e : i fa [illegible] ace da [illegible] e e e a [illegible] e [illegible] ea [illegible] e a a [illegible] e c ec e .

C d i e de ef [illegible] e [illegible] : i fa [illegible] ace e a e a e [illegible] ea [illegible] e da a c d i e de ef [illegible] e [illegible] de [illegible] e e ca [illegible] a [illegible] i- e . Si e ca [illegible] a [illegible] i- e e [illegible] f i da a i ai d [illegible] e, i e [illegible] - ce ai e de [illegible] e ici c ca [illegible] de e e ce [illegible] ifi EN.

La c d i e de ef [illegible] e [illegible] d [illegible] e di ig e a ec e b c e a -de d i ea de e- e e fi [illegible] ca [illegible] e [illegible].

I fa [illegible] i [illegible] i a d de [illegible] [illegible] a - ai i [illegible] e [illegible] d ca d i [illegible] a [illegible].

ATTENTION ! T [illegible] e e i [illegible] i e e [illegible] fi [illegible] e diff e [illegible] e [illegible] ce [illegible] e c ec e , d i e [illegible] i [illegible] e [illegible] e e e a ec c [illegible] e de e age [illegible] a [illegible] de 6 N [illegible] .

Montage du collecteur

Fe [illegible] e a a e da [illegible] e e (acce - [illegible] i e) afi d [illegible] [illegible] che e i [illegible] i d ea [illegible] e da [illegible] e [illegible] age.

compli 300. Pe ce e ba e a i ea d [illegible] a [illegible] age [illegible] e e [illegible] hai e DN 100 e [illegible]

Amenée supplémentaire DN 50 horizontale

O i a aí e fab i e a é e e ai e aide-d e cie c che e ba e .

I é e ej í b 58/50.

P é e e a d a é e a ec é e - ie de 50 e ae ej í b da é ec e .

ATTENTION ! I e é ce ai e de i é di if de e é e e ec d i e de acc d a é a ie a de a é e a - ae e ba e d e c i 300 e i ib e de ce de ie . Ce di if d i a i é e ha e i a e de 180 é e e é de a ca a i a i é e ie a de é age. De che d ai da a c d i e de ef a é e é e a e de - b é e d ac a i ai i é ef Afí d i e ce ef a c d i e d a é e e e a e é ie a a é . Le c d i da a i é e e b a ch a i é d c e .

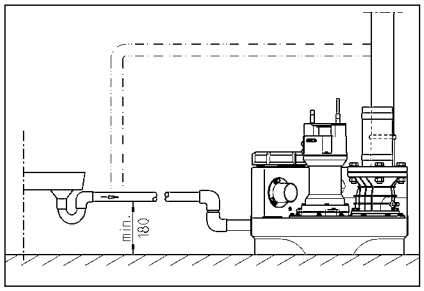

INSTALLATION ÉLECTRIQUE

T e a a de é e ec- é e a é e, a fiche é i de c é a é d é i é e é é ec icie é fi é .

A a cha e i e é i é : e i e a fiche e d é e e a - e é e é é e é a e a i é é a é e é é .

ATTENTION ! Ne ja ai é e e a fiche ec- e da ea ! L ea é ie e ce ib e de i fi e é e ca e de d fai a é ce e de é d é age a é .

I e é ce ai e de e i c é a e, cha e f i, de é é e é ig e é a e EN), de di ec i e é cifi e a é é a e VDE) ai i e de di ec i e de é a e é ca d é ea da é a é é .

Ob e e a é i é de e ice (cf. é a e ig a i e)!

Le é e di é é d c é a e de i ea i é c é che é é a é é é é f c i é d i ea dea . Le b é d di é i- if d a é e i g i f é e de a é é c é d é ed fai a é ce de f c i é é a é é e ice e-ci é é e a ag e.

Si a é é e e de é e é cha de, e e e i e é é é a e he é é a é é é e- é é. A a d é i e é é b é e, i fa d b a che a fiche ec e ca a é é é a é é e é é ai e é a che a é é a- i é é a é a i ef idi. U ig a de é a e di ec a é ie .

Postes en courant monophasé

Le é e d i é é é é e c é ec é e é i é a é e de fa g é é ai e i e i e da é e ce a ec a -de d i ea de e é e e i e é é g e é a f ib e ac i é a d e de 16 A.

Postes en courant triphasé

P é e b a che é é ec i e d é é e de e e age, i fa é é i é e i e CEE 5 é e i a e de fa g é é ai e i e é e da é e ce a ec a -de d i ea de e é e e (3/N/PE 230/400 V).

ATTENTION! I fa é i i e é é é de f ib e ac i é e a d e de di j c- e de é é C é a é é ef ib e de é i- a ce.

Montage de l'unité de commande (pas compli 300)

Fai e f c i é e i é de c é a é d é i- é é é da de e d i é ec a -de d i ea de e é e e é ga de e b ie é é - j fe é . L i é de c é a é d é i é e faci é é é acce ib e afi é i i é é ib e d effec e é c é é é é

[illegible]

[illegible]

[illegible]

Compteur horaire

[illegible] 300). [illegible] BSZ [illegible] de 180 [illegible]

Arrêter le vibreur sonore interne

[illegible] 300. [illegible] (BRX/BRX1). [illegible]

Vibreur sonore externe (accessoire)

[illegible]

[illegible] 12 VDC [illegible] "S+" [illegible] "S-" [illegible] de 30 [illegible] A. [illegible]

[illegible] 300, [illegible]

Pour les postes doubles : Voyant lumineux ou voyant d'alarme externe 230 V~ (accessoire)

[illegible] 230 V~ [illegible] 1 A) [illegible] N° 41.

[illegible] 40. [illegible] F1.

[illegible] BRX2 [illegible]
V [illegible] BRX2 [illegible] (===)
V [illegible] BRX2 [illegible] (_ _ _).

FONCTIONNEMENT

Marche d'essai et contrôle du fonctionnement

1. [illegible]
2. [illegible]
3. [illegible]
4. [illegible]
5. [illegible]
6. [illegible]
7. [illegible]
8. [illegible]

Fonctionnement automatique

[illegible] 300 : [illegible]

ATTENTION ! [illegible]

Fonctionnement manuel

[illegible]

Arrêter

[illegible] "0", [illegible]

[illegible] "0" [illegible]

Inspection

[illegible]

MAINTENANCE

[illegible] EN 12056-4.

[illegible]

[illegible]

[illegible]

[illegible]

1. [illegible]
2. [illegible]
3. [illegible]
4. [illegible]

[illegible]

5. [illegible]
6. [illegible]
7. [illegible]
8. [illegible] 2 [illegible]
9. [illegible]

[illegible]

Contrôle de l'huile

[illegible] 08/2, 25/2 [illegible] 35/2) [illegible]

[illegible]

Changement de l'huile

([illegible] 08/2, 25/2 [illegible] 35/2) [illegible] 300 [illegible]

[illegible] 1000 [illegible]

[illegible] HLP [illegible] 22 [illegible] 46 [illegible] M [illegible] DTE 22, DTE 24, DTE 25.

[illegible] 380 [illegible] M [illegible] UC 08/2 M [illegible] 25/2 M [illegible] 1000 [illegible] M [illegible] 25/2 BW [illegible] 35/2 BW.

[illegible]

Contrôle du jeu de coupe

([illegible]).

[illegible]

[illegible]

[illegible]

[illegible] 0,2 [illegible]).

Si [illegible] 1 [illegible] 4.

PETITE AIDE AU DÉPANNAGE

Le pompe ne tourne pas

[illegible]

Le poste ne fonctionne pas, signal d'alarme

[illegible]

Rendement de refoulement diminué

[illegible]

L'affichage indique "Drehfeld falsch" (rotation du champ incorrecte, uniquement courant triphasé)

[illegible]

L'affichage indique "Störung Pumpe" (Défaillance Pompe, pas compli 300)

[illegible]

L'affichage montre "Hochwasser" (Niveau trop haut des eaux usées, pas compli 300)

[illegible]

La diode P1 sur le module de contrôle analogue s'allume en continu (pas compli 300)

[illegible]

La pompe fait du bruit et ne s'arrête pas (pas compli 300)

[illegible]

ATTENTION ! [illegible] (cf. "R[illegible]").

VEILIGHEIDSTIPS

ATTENTIE!

Personeelskwalificatie

Veilig werken

Veiligheidsinstructies voor de gebruiker/eigenaar

Veiligheidsinstructies voor montage, inspectie en onderhoudswerkzaamheden

Eigenmachtige modificaties en vervaardiging van onderdelen

Oneigenlijk gebruik

Aanwijzingen voor het voorkomen van ongevallen

GEBRUIK FECALIËN-POMPINSTALLATIES

De ka -e -k a e c i-feca- a a ie ij c f de LGA- e ke i g ge e e ge chik he a af- a a e i e e e i i , e e a a h i h de ijk af a a e e de geb ike- ijke e egi ge .

De a k k e de a e aa e e a h g e a 2 WS e ee a a e i de a 7 dage .

De ege aa a ag ie de a e aa, aa i be a d ege a e c f IP 44.

I die ge a ee d a ge ch e e e bij j i geb ik, d e de ege aa aa de be che i g ei e a de EMC- ich- ij 2014/30/EU e i ge chik geb ik i h i e aa i g he e ba e e ek, ici ei e . Bij aa i g ee i- d iee e e k i ee i d iee bed ijf e ee i ie i g ia ee eige h g a i g a f a , e e de be aa de e a dighede e ee ech e be e digheid ege i ge eke i g - de geh de .

Bij geb ik a de i a a ie e e de e ec ie e a i a e e e , ch if e e de g ee e ijke be a i ge de a- ge eefd, a bij bee d

P a a ie af a a e a ge- b e e e ie (bij bee d i E - a EN 12050 e 12056)
I a a ie a aag a i g i a a ie (bij bee d i D i a d VDE 0100)
Vei igheid e a beid idde e (bij - bee d i D i a d Be SichV e BGR 500)
Vei igheid i he af a a e i a a ie (bij . i D i a d GUV-V C5, GUV-R 104, GUV-R 126)
E ek i che i a a ie e d c i id- de e (bij bee d i D i a d GUV-V A3)
E iebe ei igi g c f EN 60079-0, EN 60079-1, EN 60079-14, EN 60079-17 e EN 1127-1

Leveringspakket

Ta k e fe) e k fe de i aa
Ve k DN 150 / DN 100 c i 500 e 1000
O e ch if f e a i a ie (c i 1200 e a i che e bi di ge e be e - igi g i ge)
Aa i f e de d k eidi g e a i che e bi di g e be e igi g - i ge de d k eidi g
S eekafdich i g(e) de ha b aa f e a i aa DN 50
Be e igi g a e iaa de a k
Te g agk e de d k eidi g (c i 300, 500, 1000 e 1200)
Rege aa (i e bij de c i 300)

Gebruikswijze: intermitterend bedrijf S3, zie technische gegevens

INBOUW

De a a ie e ij aa d de ge a ee d e da ig da aa e d k i gega a dee d. Naa e b e a e e - de h de de de e e ee e k e a e i e 60 i de beed e f h g e aa e ig ij .

Ve i a a ie: de e i a a ie eidi g e e he dak de ge eid.

I aa : I de i aa de a k e ee af- a a e ch ifaf i e ij aa geb ach .

D k eidi g: Ach e de e g agk e i de d k eidi g e e g ee af a a e ch if- af i e ij aa geb ach . W d de e g- agk e ie e ee e e d e de i a a ie, da e ee EN-gece ificee de e g- e be ei igi g de i geb d.

De d k eidi g e e e ee b e he ka e i g i ea de ge eid.

V de e a e i g a a de e e e k ke de aa geb ach .

ATTENTIE! A e ch e e die die e he a e e a af de ijke de de e aa de a k, e ge ech e e ee a aa e e 6 N de a ge- d aaid.

Montage van de tank

De ch ifaf i e i de i aa (ebeh e) i e e bi e di ge a a e ijde de i a a ie e k e .

compli 300. De ge e e i aa DN 100 aa de ijka f b e e ee ga e aag 102 f ee dec e ee aag bij de e a ke i g e age e b e . De e eege e e de k fe e e de e ka ch e e je i de i aa be e ige .

He h ekij e de e a ke i g a de i- a a ie e de a k ch e e e e ge de i a a ie e de e a f e e de aa- ag e de i aa b i ch i e .

Da de e a ke i ge de g da ke af eke e , i b e e de e gge e aa e .

N ka de e a f e de a ged aaid e de i a a ie e h e ch e e e i ge i de e e a ke d.

Alle andere c i- i a a ie e de k fe e de aa ag e de i aa b i ch i e e i ij e .

A e ee DN 150- iji aa de geb ik, e e de e ee e e beh a ee ga e - aag e ee di e e a 152 de e a ke- i g de e e ge aagd e b a d. De a daa d e e e e da e e de i e (acce i e) de ge e e he i cha- ke i ea e e ie de gedefi i- ee d.

Opmerking: Bij de c i 500 e 1000 ka de i aa a DN 150 aa DN 100 de e k ei d, i die he e eege e e de e k ee i de k e e f e i ge aa .

De e ka ch e e a de k fe e e- ig aa d aaie .

Ga e de e age a de a k af- eke e e i b e .

H ch ef e e i g e g d he ga i de a k eke e a ch e e .

ATTENTIE! De ch e e ech e e aa- d aaie da de a k ie d e d, e - da e a de ka ekkage aa .

V de i a a ie a de e ie c i 1200 i de a k b e die i ge e e ee h ekij e aa de ijka e .

Montage van de ventilatie

De ch i g e e de e ch if f DN 70 ech b e de a k aa i e e e he dak eide .

Bij de c i 1200 de b e e ech e 78 de a ke i g af age e b a- e . N de e i a ie e de e a i che e bi di g DN 70 aa i e e e he dak eide .

Montage van de drukleiding

O de af e f e e :
1. Te g agk e (i die ie i beg e)
2. Af i ch if (ebeh e)
3. Aa i f e e
4. e ee e a i che e bi di g de d k ei- di g aa i e e e ee b e he ka e i a eide .

Aansluiting DN 50 verticaal op de noodaf- voer

De e aa i g d geb ik he aa i e a ee ha b aa

De i de a ke i g age a ee ga e aag e b e .

De g 58/50 aa b e ge .

Ee i aa b i e e b i e di e e a 50 d de gafdich i g i de a k eke . De af a d e b d a de -N38 41 ETd .

aa i eidi g k e afb e b e e e g i g ede . de e e g - i g e e ijde , e de i aa eidi g he h g e de ch . De - ch i g eidi g ka de aa ge e de a k e i aie.

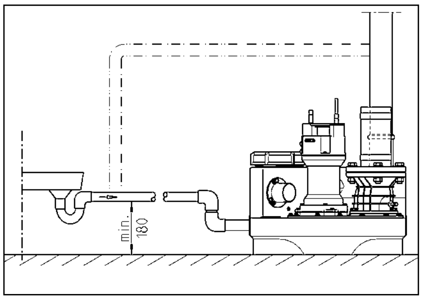

ELEKTRISCHE AANSLUITING

A ee ee gek a ificee de e ek- e ag e k aa hede aa de ekke f ege aa e e .

V afgaa de aa a e e k aa - hede de i a aie k e e a he e ek ici e e e - ge da de i a aie d a de e e e ie ie de a i g ka de ge- e .

ATTENTIE! Leg de ekke i he a e ! E e ee bi e d i ge d a e ka eide i ge e chade.

De a i g ij de e (bij . EN), de a d- ecifieke e ge i g (bij bee d VDE) e de ch if e a de aa e ijke e e ke a e e i ach de ge e .

Bed ijf a i g i ach e (ie e- aa je)!

De i a aie hebbe ee i ea chake i g die de i - f chake , afha ke ijk a he a e ei . De a de i ge- b de a a geef da e ee f cie i g i , k a i di ech ijde ijk.

I de e a ge de , da d de e ge chake d d de ikke i g he- a e . V da de i g d ehe e , e de ekke he c ac de ge kke , da a de de a a i ch ee aa aa a afk e- i g. E i d gee di ec e i g e di g aa .

Wisselstroominstallaties

De i a aie ag a ee aa de aa - ge e ee ac da ge de ch if e i ge a ee d e ich i ee d ge e b e he e g i ea be- i d e e 16 A (aag) i be ei igd.

Sterkstroominstallaties

V de e ek i che aa i g a de - a aie e ee ge de ch if- e ge a ee d 5- ig CEE- ac de aa geb ach , da ich i ee d ge e b e he e g i ea be i d (3/N/PE 230/400 V).

ATTENTIE! A eke i ge de i a a- aie ge a ee age eke i ge f eke- i ga a e e C-ka ak e i iek de geb ik .

Montage van de regeling (niet bij de compli 300)

De ege aa ag a ee i d ge e b - e he e g i ea de geb ik e de beh i i g e eed ge e b ij e . De ege aa e akke ijk ega ke ijk ij , da e k e ee c e - ge ijk i . H ge ch ch igheid e c de - aie k e de ege aa be chadig .

Schakelniveaus

De i -e chake e ij i de fab iek i ge e d de a daa i aa h g e a de be effe de i a aie.

A ee a de e i aa h g e i , e he i chake ie defi i e (ie bij de c i 300), a de ka di i be aade ge a e eide ee e g - i g i de i aa .

De ege aa e de a de e chake e he a a (+ 2), e bij d bbe e i - a aie k de iekbe a i g (+4), da a a i ch die e ee k ig ie i .

Inschakelniveau opnieuw definiëren (niet bij de compli 300)

Schake de i a aie ijde ijk i , e de ha d-0-a a i ch- chake aa .0 . De aa i g a he i chake i d aa i de d e a a ge i e e K1 aa de ech e ijka a de be i g. Ve - ijde ijde ijk de a a e dek e a de d e.

de a a ge i e e be i de ich d ie edje , die e P1 - P2 - P3 ij aa gege e .

- P1 = Diag ef cie
- P2 b a d = Wa e ei ig b e he i- chake i ea aa g de he i- chake i ea
- P3 b a d = Wa e ei heef he i cha- ke i ea be eik

V de e e a k aa de de ka a de i aa e a e . A ee P2 ag b a - de , a k P3 b a d , e he ee e a - de de bijge e d.

D aai de k ei e e ch ef de P1 ee age e de k k ee. D de e i de a k de he i chake e aa he ee aa b e k e . B a d P3 da g eed , d aai da de e ch ef g ee ag e de k k ee e d de e ie de .

He haa di ce e a g P3 ie ee b a d , d aai de ch ef da ee ich ig ege de k k i , P3 ee gaa b a de . He i chake i i ge- e d.

Alarminstallatie

S i g e di ge de e i ee a ak e i ch ee gege e . He a he e afha ke ijke a daa da a e d i ge a de (d edje, ie bij de AD 00 e c i 300). Te- ge ijke ijd k i k e ee ge eg ee d ak e - i ch a a ig aa . Di ak e i ch ig aa ka d he e he e a de i g f ge- i he a g ee de ige chake d.

I de age ca ie gee ak e i che c e a de i g e di g ge ijk, da ka he a a ig aa ia he e i- aa ije c ac (k e 40 e 41) aa de i aa (bij de c i 300 i de ekke) de ge eid. He e kc ac a de e e i g i a e 5A / 250V AC be a baa . He c ac e ich a hef- fi g a de i g.

Accu voor alarminstallatie (niet bij de compli 300)

De a daa da a i a aie i afha ke ijk a he e ek ici ei e - da i egge i he ge a a ee i g ka gee h g a e a a de gege e . de a a i a aie k ijde ee - i g i e ki g e h de , e ee acc de geb ik . He d ich ige dek e e e . De acc de aa k aa - e e de daa be de aa de i aa e de aa e ige kabe bi - de be e ige . De e ka he a a e bij c i a a ged e de ge ee 1 a ie .

Nada e ee i , d de acc a - a i ch ege ade . Ee ege acc i bi e ge ee 24 ee bed ijf k aa , ee - edige adi g d a ge ee 100 be eik .

He f c i e e a de acc ege a ig c e e ! Daa e de e i g i - chake e e ee h g a e e di g - e e . He e a he ge id a a ag ged e de ee aa a i e ie e k- baa af e . De e e d bed aag - ge ee 5 jaa . De i geb ik a eda de acc e e e de e a 5 jaa i g e a ge .

A ee ee 9V-acc geb ike ! Bij geb ik a d ge acc be aa ffi g ge aa .

Bedrijfsurenteller

i ee ka ee bed ijf e e e i de ege aa de ge aa (ie bij de c i 300). Hie e de aa i ge a de bed ijf- e e e ge ee 8 i k e e de i aa aa BSZ i de 4 b e eke . I die a he ee i chake e a de i a aie ie d ee gege e e de e e 180 de ged aaid.

Intern alarmzoemer uitschakelen.

Ge d ie de c i 300. De e ege - de j e (BRX/BRX1) egha e . O da de ekke ie k ij aak , de j e ie ee a de 2- ige c ec aa- e .

Externe alarmzoemer (toebehoren)

He d ich ige dek e a de ege aa e- e .

O de k e "S +" e "S-" ka ee a, a a e ak e i che 12 VDC/ i- chake aa e ee e b ik a a 30 A de aa ge e . De i e e a a e- e ka aa ke e de i ge chake d f i ge chake d.

Bij de c i 300 ka ee a he e ek ici- ei e k afha ke ijk a a a e eb- h e de g ee d, ee e age- e je i aa e ig de a k.

In dubbele systemen: Extern 230V knipperlichtje of waarschuwingslampje (toebehoren)

230V (1A) k e N e 41 aa i e .

Ge ee de d aadb g a k U z aa 40 aa b e ge . De k i g d d F1 be ei igd.

De i eekb g BRX2 a g i e e :
K ie ich je: de BRX2 e a- e ===)
Waa ch i g ie e BRX2
(k ie e d _ _ _).

GEBRUIK

Proefdraaien en functiecontrole

1. He ei igi g ik de a k e e .
2. Sch if i de i aa- e d k eidi g e- e .
3. I a a ie de e a i g e e , d aai- e d ee ga e i de ga e h de .
4. Ta k he i chake i ea e .
5. De e chake ich e f i e de a k d ge eegd. He e ce ia de ei igi g e i g ge .
6. De e a de i ea chake i g e de ha d a g a b e he i chake a i e da he a a afgaa .
7. Rei igi g e i g ee e ik e af- dich i g af i e .
8. Aa de ha d a e chi e de chake c - c i de afdich i ge a de a k, de i - i g e de eidi ge c e e .

Automatische stand

De a a i che a d i de a e a d a de i a a ie. Hie e e de e - chake aa i de a d "A a ik" (a - a i ch) de ge e . Via de ge eg ee de i ea chake i g d de e aa de ha d a he ei f i ea i de a k i - e i ge chake d. De e ki g a de e (bij de c i 300 bed ijf ge eedheid) d aa gege e d ee g e edje.

ATTENTIE! Bij i de ijk g e h e ee he- de aa e (bij . egi g a ee bad) e de ch if i de i aa e de ee ge a e , da de i a a ie i de a e chake a d b ijf e ke (gee c i e d aaie , a de be aa e ka e e hi i g a de).

Handbediening

De e chake aa i de a d "Ha d" e e . De e k c i e e afha - ke ijk a he af a a e i ea . He e e e daa ia de ei igi g e i g i de ga e de geh de .

Stopzetten

De e chake aa i de a d "0" e e , de i e i i ge e . De a a i a a ie i ge e ee geb ik k aa .

V e a a ie e de h d - e k a hede aa de ege aa f de i e i e a d "0" geb i- ke , a aa de ekke i he c ac ekke .

Inspectie

O de bed ijf eke heid e ga a de e e a aa de ijk ee i e e i ec ie a de i - a a ie aa i de , e i beg a de e i e bi di ge .

ONDERHOUD

Wij ade aa he de h d i e e e c f EN 12056-4.

O ee e e a e e e a i e e be - baa heid a i a a ie e ga a de e , ade ij aa ee de h d c ac e i e .

He de h d a de feca- i - e i a a ie e de aa ege e e i a dh di g e e de i ge e d d ge ec ia i ee de a e - e e e e a 3 aa de i be- d ij e , 6 aa de i a a e geb - e f 12 aa de i ee ge i i ge).

V afgaa de aa a e e k a - hede de i a a ie k e e a he e ek ici ei e e e e - ge da de i a a ie ie d a - de e e e ie de e a i g ka de ge e .

S ekke e bbe a g e - cha i che e che i che be cha- digi g c e e . Be chadigde f gek ik e a ge f eidi ge e e de e a ge .

Wij ade aa bij de h d de ge de e k a hede i e e e :

1. De e bi di ge e ekkage c e e d de ge i g a de i a a ie e de a a g ed e de eke .
2. Bedie e a de ch if; c e e f de e e be eeg , i die dig aa - a e e e i e e .
3. O e e e ei ige a de e g - b kke i g, c e e a aa i g e k - ge (k e).
4. Rei ige a de e e di ec aa ge- e eidi ge ; c e a de aaie e de age .

Ve e e aaie k e che e a de hebbe .

5. O iec e e, i die dig bij e f e - e e (i die ee iek e aa e ig i).
6. Bi e ei igi g a de a k (i die dig f bij ecia e ei e), bij . e e ijde e .
7. C e e a de e a d a de e - e a k.
8. O de 2 jaa de i a a ie e a e d e e e .
9. C e a he e ek i che gedee e a de i a a ie. De ege aa e f i de - h d ij, aa ch e ee acc ij i geb d, da e e die ege a ig - de gec ee d e e ki g. Daa e bij ee e i g g aak e i a a- ie de e i de a k e i e e ee h g a e a a k i k . Daa aa e e de e i die dig de ge ei igd.

Na iii g a de de h d e k a - hede ka de i a a ie a e efd aaie ee i geb ik de ge e . Va he de h d e ee e ag de ge- aak e e e e di g a a e i ge e de e k a hede e de e e e gege e .

Oliecontrole

(Ge d a ee 08/2-, 25/2- e 35/2-i a- a ie) Ee de de e ka ch e e f i b ch e e d de e e ged aaid e de e d da e e de aaie a de a k gehaa d. De - e af a e i g a de iek e d d de af i ch ef "" (ie) aa b i e e afgedich . Te c e a de iekee i gafdich i g d de ie i de iek e e e i beg a de e e- e de h e ee heid afge a e e e d i ee ch e aa beke .

A de ie e e gd i e a e e - kach i g i), e e de ie de e e . Na g ee 300 bed ijf e a ech- e a 6 aa de , ie c e e ! I de ie e e gd e e a e a e e i igi ge , da e e aa de ie k de g ij i gafdich i g de e- a ge . O de iek e e be ake , ka k ach e af de e ek de a afdich i g c e ea a aa "DKG" i aa a de af i ch ef "DKG" - de g e d.

Olieverversing

(Ge d a ee i a a ie e de e e 08/2, 25/2 d 35/2) Te beh d a ee be ba e e ki g e a 300 be- d ijf e de ie de ee e aa de e e e daa a a e ke 1000 bed ijf e . Bij i de bed ijf e e e i e ee e aa e jaa de ie de e e .

W[illegible] d[illegible] af a [illegible] e[illegible] e[illegible] k ch [illegible] e de addi-[illegible]ie e[illegible] afge[illegible] e d, da[illegible] e[illegible] de [illegible] ie[illegible] e[illegible] a-[illegible] e a[illegible] k[illegible] e e[illegible] [illegible] e[illegible] [illegible] e[illegible] de [illegible] e e [illegible].

V[illegible] de e e i[illegible] g a[illegible] de[illegible] ie i[illegible] de[illegible] ieka-[illegible] e[illegible] [illegible] e[illegible] h d a i che HLP-[illegible] ie a[illegible] i c[illegible] -[illegible]ei[illegible] k a e 22[illegible] 46 [illegible] de[illegible] geb ik[illegible], bij-[illegible] bee d DTE 22, DTE 24, DTE 25 a[illegible] M[illegible] bi .

De h[illegible] e ee heid bed aag[illegible] 380 [illegible] de M[illegible]iC[illegible] UC 08/2 M e[illegible] 25/2 M e[illegible] 1000 [illegible] de M[illegible]iF ee[illegible] 25/2 BW e[illegible] 35/2 BW.

De[illegible] ieka[illegible] e[illegible] ag a ee[illegible] de[illegible] ge[illegible] d[illegible] e[illegible] de aa[illegible] gege e[illegible] h[illegible] e ee heid[illegible] ie. Te ee[illegible] ie ka[illegible] eide[illegible] defec[illegible]e aa[illegible] de[illegible]

Controle van de snijspleet

(A ee[illegible] a[illegible] e[illegible] a i[illegible] g [illegible] [illegible] e[illegible] e[illegible] ee[illegible] ij ie). E[illegible] e[illegible] de[illegible] gec[illegible] ee d [illegible] f beh i i[illegible] g ch[illegible] e e[illegible] a[illegible] de[illegible] e[illegible] de e bi[illegible] di[illegible] g - e[illegible] be e[illegible]igi[illegible] g b[illegible] e[illegible] a[illegible] de i[illegible] a[illegible]ie g[illegible] ed a[illegible] [illegible]e[illegible] , e[illegible] i[illegible] die[illegible] [illegible] dig [illegible] e[illegible] e[illegible] de[illegible] aa[illegible] ged aaid.

Bij af[illegible] e[illegible] d debie[illegible], [illegible] e[illegible] e[illegible] d a aai bij geb ik[illegible] f af[illegible] e[illegible] d e[illegible] [illegible] ge[illegible] (b[illegible] kkee -[illegible] eigi[illegible] g a[illegible] de[illegible] [illegible] e[illegible] e[illegible] de aaie e[illegible] he[illegible] [illegible] echa[illegible] i[illegible] e d[illegible] ee[illegible] [illegible]ecia i[illegible] [illegible] ij[illegible]age [illegible] de[illegible] gec[illegible] ee d e[illegible] e e[illegible] ee e a[illegible] ge[illegible] .

Me[illegible] ee[illegible] ge chik[illegible] h [illegible] idde[illegible] a bij[illegible] -bee d ee[illegible] e e[illegible] aa[illegible] ka[illegible] de[illegible] ij[illegible]ee[illegible] -[illegible] e[illegible] de[illegible] ij[illegible] e[illegible] de[illegible] ij[illegible]aa[illegible] [illegible] de[illegible] ge-[illegible] e[illegible] . Ee[illegible] ij[illegible]ee[illegible] a[illegible] ee da[illegible] 0,2[illegible] [illegible] e[illegible] [illegible] de[illegible] e ggeb ach[illegible].

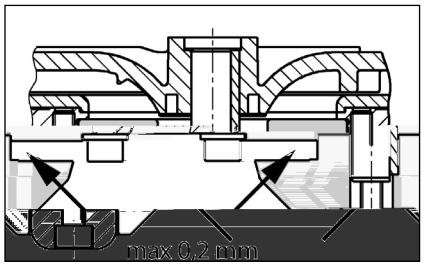

Instellen van de snijspleet

(A ee[illegible] a[illegible] e[illegible] a i[illegible] g [illegible] [illegible] e[illegible] e[illegible] ee[illegible] ij ie).

1. De[illegible] ij[illegible] e[illegible] ee[illegible] k h[illegible] b[illegible] kke e[illegible] e de ce[illegible] a e i[illegible] b ch[illegible] ef e [illegible] ch[illegible] e e[illegible].

2. De[illegible] [illegible] e, de[illegible] ij[illegible] e[illegible] ee[illegible] e[illegible] a i[illegible] g e ijde e[illegible] e[illegible] e[illegible] ge[illegible] de[illegible] [illegible] e e[illegible] de[illegible] ij[illegible] ee[illegible] e[illegible] g[illegible]aa[illegible] e[illegible].

3. De[illegible] ij[illegible] e[illegible] ee[illegible] b[illegible] k h[illegible] b[illegible] kke e[illegible] e[illegible] e[illegible] de i[illegible] b ch[illegible] ef ee a[illegible] ch[illegible] e e[illegible] (aa[illegible] e[illegible] [illegible] e[illegible] 8 N[illegible]).

4. C[illegible] e e[illegible] f de[illegible] ij[illegible] ij ka[illegible] be e-ge[illegible] e de [illegible]ee[illegible] [illegible] ie [illegible] e[illegible] e[illegible] a [illegible]0,2 [illegible]).

I de[illegible] ij[illegible]ee[illegible] [illegible] g[illegible]eed[illegible] e g[illegible], e ijde da[illegible] g ee[illegible] a i[illegible] g. De[illegible] [illegible] e[illegible] 1-4[illegible] [illegible] e[illegible] de[illegible] he haa d.

BEKNOPTE HULP BIJ STORINGEN

De installatie loopt niet

Ne[illegible] [illegible] i[illegible] g, eke i[illegible] g e[illegible] [illegible] de -b eke c[illegible] e e[illegible]. Defec[illegible]e eke i[illegible] ge[illegible] a ee[illegible] e a[illegible] ge[illegible] d[illegible] eke i[illegible] ge[illegible] e[illegible] de e fde[illegible] i a e aa de[illegible]. Bij he haa -de ijk[illegible] k a[illegible] a[illegible] de eke i[illegible] g ee[illegible] e ek[illegible] [illegible] e[illegible] f de k a[illegible] die[illegible] a[illegible] de fab iek be e[illegible].
De i[illegible] e[illegible] age g a e[illegible] eke i[illegible] g a[illegible] 2

USO

Le [illegible] ce[illegible]ifica[illegible]e e-[illegible] gia LGA e [illegible] i[illegible]dica[illegible]e i [illegible] di ac[illegible] e di ca ic[illegible] da bag[illegible] i e [illegible] ch di ac[illegible] e [illegible] che d[illegible] e[illegible]i-che c[illegible] i [illegible] e c[illegible] i.

I e ba[illegible] i [illegible] e gibi i[illegible] [illegible] a[illegible] a [illegible] a di 2[illegible] .c.a e [illegible] a d a[illegible] a [illegible] a di 7 gi[illegible] i.

I c[illegible] a d[illegible] e gibi e,[illegible] a[illegible] e i-[illegible] e ag i chi i di ac[illegible] a ec[illegible] d[illegible] a IP 44.

I ca[illegible] di i[illegible] a a i[illegible] e ec[illegible] d[illegible] e di[illegible] i-i[illegible] i e di [illegible] c[illegible] f[illegible] e, i c[illegible] a d[illegible] ddi fa i e, i i[illegible] di[illegible] e i[illegible] e de a di e[illegible] i a EMC 2014/30/EU ed[illegible] id[illegible] e[illegible] e[illegible] e d[illegible] e[illegible] ic de a e[illegible] e di a[illegible] e[illegible] a i[illegible] e e e[illegible] i-ca[illegible] bb ica. I ca[illegible] di c[illegible] ega[illegible] e[illegible] ad[illegible] a e[illegible] e i d[illegible] ia e a i[illegible] e[illegible] di[illegible] a fabb ica c[illegible] a[illegible] e[illegible] a i[illegible] e di c[illegible] e[illegible] e[illegible] e ie[illegible]-[illegible] e da[illegible] a f[illegible] a[illegible] e di a[illegible] e[illegible] i[illegible] e ade-g a[illegible] i de e c[illegible] i de a e [illegible] a e i[illegible] a a e i[illegible] e fe e[illegible] e i[illegible] fficie[illegible] e.

Pe [illegible] de e[illegible] a i[illegible] i de[illegible] i[illegible] a e e e a[illegible] i e eggi, [illegible] a[illegible] i e a i[illegible] a i e e di e[illegible]-[illegible] i e [illegible] ca i, ad e .

- S[illegible] a i[illegible] i di [illegible] e[illegible] e[illegible] ac[illegible] e ef e[illegible]e i d e[illegible] aggi[illegible] di edifici e[illegible] e[illegible] i ag ic[illegible] i (ad e .i[illegible] E [illegible] EN 12050 e 12056)
- Rea i a i[illegible] e di[illegible] [illegible] a[illegible] i e e[illegible] ici a ba a [illegible] e[illegible] e (ad e .i[illegible] Ge[illegible] a[illegible] ia VDE 0100)
- Sic e a e[illegible] e i[illegible] e a[illegible] i i (ad e .i[illegible] Ge-[illegible] a[illegible] ia Be[illegible] SichV e BGR 500)
- Sic e a i[illegible] [illegible] a[illegible] i di ca ic[illegible] de ac-[illegible] a (ad e .i[illegible] Ge[illegible] a[illegible] ia GUV-V C5, GUV-[illegible]R 104, GUV-R 126)
- [illegible] a[illegible] i e e[illegible] ici e[illegible] e i[illegible] e a[illegible] i i (ad e .i[illegible] Ge[illegible] a[illegible] ia GUV-V A3)
- A[illegible] idef ag a i[illegible] e EN 60079-0, EN 60079-1, EN 60079-14, EN 60079-17 e EN 1127-1

Dotazione

- Se ba[illegible] i c[illegible] [illegible] e(e) e f a[illegible] gia di e-aggi[illegible] e aff [illegible]
- Rid[illegible] e DN 150 / DN 100[illegible] e c[illegible] [illegible] i 500 e 1000
- Ma[illegible] c[illegible] e[illegible] e[illegible] a e[illegible] a i[illegible] e (c[illegible] [illegible] i 1200 c[illegible] ega[illegible] e[illegible] i e a[illegible] ici c[illegible] fa ce[illegible] e)
- F a[illegible] gia di c[illegible] ega[illegible] e[illegible] [illegible] e i[illegible] ea di[illegible] a[illegible]-da[illegible] a
- C[illegible] ega[illegible] e[illegible] e a[illegible] ic[illegible] c[illegible] fa ce[illegible] e[illegible] e a i[illegible] ea di[illegible] a[illegible] da[illegible] a
- G a[illegible] i i[illegible] ia [illegible] a[illegible] e a[illegible] [illegible] a[illegible] [illegible] - b a[illegible] a[illegible] a e[illegible] a[illegible] aff [illegible] DN 50
- Ma[illegible] e ia e di fi aggi[illegible] e i e ba[illegible] i
- Va[illegible] a di[illegible] i[illegible] [illegible] e a i[illegible] ea di[illegible] a[illegible]-da[illegible] a (c[illegible] [illegible] i 300, 500, 1000 e 1200)
- C[illegible] a d[illegible] ([illegible] c[illegible] [illegible] i 300)

Tipo di funzionamento: Funzionamento al-

di [illegible]. L[illegible] b[illegible] a[illegible] a[illegible]ica [illegible] e a [illegible] ea di c[illegible] ega[illegible] e[illegible] ca a e[illegible]-b[illegible] i di ca ic e i[illegible]ag[illegible]. Pe e i[illegible]a e i i-[illegible]ag[illegible], fia[illegible]a e a [illegible] ea di aff [illegible] e [illegible] [illegible] a[illegible]. La [illegible] ea di e[illegible]a i[illegible] e[illegible] e e e c[illegible] ega[illegible]a a e[illegible]a i[illegible] e de e ba[illegible] [illegible].

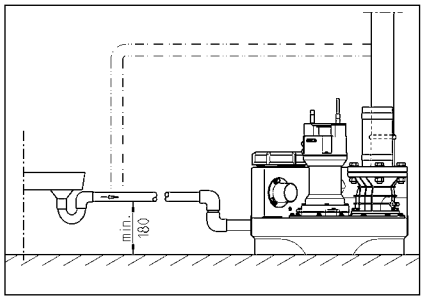

COLLEGAMENTO ELETTRICO

S[illegible] [illegible] e e[illegible] ici[illegible]a e e[illegible] [illegible] e eg i e i[illegible]e e[illegible]i e e[illegible] ici a a [illegible], a a [illegible] a [illegible] a c[illegible] a d[illegible].

P[illegible] a di[illegible] a ia i a [illegible] [illegible]acca e a [illegible] a de[illegible] a [illegible] a i[illegible] e i[illegible] [illegible] che a [illegible] a i[illegible] e [illegible] [illegible] a e e e[illegible] e [illegible] [illegible] e i[illegible] e da a [illegible] e[illegible] [illegible] e.

ATTENZIONE! N[illegible] [illegible] e ge e[illegible] ai i[illegible] ac[illegible] a a [illegible] a! L'e [illegible] a e[illegible] e[illegible] a i[illegible] e de [illegible]ac[illegible] a[illegible] ca a e g a[illegible] i e da[illegible] i.

Ri[illegible]a e e[illegible] e a ide (ad e . EN), e di-e[illegible] i e a i[illegible] a i (ad e . VDE) e e[illegible] a[illegible] i e de e c[illegible] [illegible]ag[illegible] ie di f[illegible] a e e[illegible] ica[illegible] ca i.

O e a e a [illegible] e i[illegible] e d'e e c i i[illegible] (ede e [illegible] a ghe[illegible] a ide[illegible]ifica[illegible] i a)!

Le [illegible] a i[illegible] i [illegible] d[illegible]a e di c[illegible] [illegible] a i[illegible] e di i e [illegible] che a[illegible] i a[illegible] [illegible] di a[illegible] i a [illegible] a[illegible] [illegible] e a ec[illegible] da de i e [illegible] di ac[illegible] a. I eg a e ac[illegible] ic[illegible] de [illegible] a[illegible] di a [illegible] e i[illegible] eg a[illegible] eg[illegible] a a a[illegible] e e[illegible] a di [illegible] a[illegible] a ia di f[illegible] i[illegible] e[illegible] a[illegible] che e[illegible] e a[illegible] [illegible] [illegible] [illegible] a[illegible] ea.

Se a[illegible] [illegible] a [illegible] i ca da[illegible] a, i[illegible] [illegible] a[illegible] di a [illegible] g[illegible] e[illegible] a [illegible] eg[illegible] e. P[illegible] a de a i-[illegible] i[illegible] e de a ca a de [illegible] a[illegible] a ia, i de e [illegible] acca e a [illegible] a[illegible] ich i ca [illegible] c[illegible] a i[illegible] a [illegible] [illegible] a[illegible] ebbe ia[illegible] a i a [illegible] [illegible] [illegible] e[illegible] e d[illegible] i aff edda[illegible] e[illegible]. N[illegible] i[illegible] a eg a-a i[illegible] e di[illegible] a de [illegible] a[illegible] a ia.

Stazioni a corrente alternata

La [illegible] a i[illegible] e[illegible] e e e c[illegible] ega[illegible] a [illegible] ad [illegible] a [illegible] e a i[illegible] a a[illegible] a ec[illegible] d[illegible] e[illegible] e, a[illegible] a e i[illegible] a i[illegible] [illegible] bie[illegible] e a ci[illegible] a di[illegible] a de i e [illegible] di i[illegible]ag[illegible] e[illegible] e[illegible] a c[illegible] [illegible] f i-bi e da 16 A (i[illegible] e).

Stazioni a corrente trifase

Pe i c[illegible] ega[illegible] e[illegible] e e[illegible] ic[illegible] de a [illegible] a i[illegible] e di [illegible] e [illegible] i de e[illegible] e ede e [illegible] a[illegible] e a CEE da a 5[illegible] i i[illegible] a a[illegible] a ec[illegible] d[illegible] e[illegible] e, a[illegible] a e de e[illegible] a i i[illegible] [illegible] bie[illegible] e a ci[illegible]-[illegible] a di [illegible] a de i e [illegible] di i[illegible]ag[illegible] (3/N/PE~230/400 V).

ATTENZIONE! C[illegible] e[illegible] ef ibi i[illegible] e a [illegible] a-i[illegible] e i de[illegible] [illegible] i i a e [illegible] f ibi i i e[illegible] [illegible] di[illegible] i i a [illegible] a[illegible] ici c[illegible] ca a[illegible] e i ica C.

Montaggio del comando (non compli 300)

Me[illegible] e e i f [illegible] i[illegible] e i c[illegible] a d[illegible] [illegible] i[illegible] [illegible] bie[illegible] i a ci[illegible] i a di [illegible] a de i e [illegible] di i[illegible]ag[illegible] e[illegible] e e a [illegible] ggia[illegible] e[illegible] [illegible] e chi [illegible]. I c[illegible] a d[illegible] de e e e be[illegible] acce ibi e af-fi ch ia [illegible] e[illegible] ibi e [illegible] c[illegible] [illegible]. L'e-e a[illegible] a[illegible] idi[illegible] e a c[illegible] de[illegible] a[illegible] [illegible] [illegible] da-[illegible] eggia e i c[illegible] a d[illegible].

Livelli di commutazione

I [illegible] i di a[illegible] i a i[illegible] e e di a[illegible] i a i[illegible] e [illegible] [illegible] [illegible] a[illegible] da a fabb ica[illegible] e [illegible] a[illegible] e a di af-f [illegible] a da d de a e a[illegible] i a [illegible] a i[illegible] e.

Se i d[illegible] e e e e i[illegible] a e [illegible] a a[illegible] a[illegible] e a di aff [illegible], idefi[illegible] i e i[illegible] [illegible] di a[illegible] i a i[illegible] e ([illegible] c[illegible] [illegible] i 300)[illegible] ich i[illegible] ca[illegible] c[illegible] a i[illegible] e [illegible] af-f [illegible] i[illegible] e ifica e [illegible] i[illegible]ag[illegible].

G i a[illegible] i[illegible] i di c[illegible] [illegible] a i[illegible] e[illegible] e [illegible] a a[illegible] e (+ 2 [illegible]) e i ca ic[illegible] di[illegible]cc[illegible] (+4 [illegible])[illegible] e g i [illegible] [illegible] a i d[illegible] e g[illegible] [illegible] e[illegible] [illegible] a[illegible] i a[illegible] a-[illegible]ica[illegible] e[illegible] da c[illegible] a d[illegible].

Ristabilire il livello di attivazione (non compli 300)

Cicalino di allarme esterno (accessori)

Aie e e a a e e de c a d .

Ai e i S+ e S- ibi e c ega-e a a d e di eg a e ac ic a a a 12 V DC c a bi e di c e e di a 30 A. I cica i di a a-e i e e e a i a di a i a a ce a.

C i c i 300 ibi e a e a-a e i di e de e da a e e c e acce i, e ba i e e e cc di aggi .

In caso di impianti doppi: Spie di allarme o lampeggianti esterne a 230 V (accessori)

C ega e a ia a 230 V (a 1 A) a e N e 41.

I e i e j e i a i da e Uz d 40. I ci c i e da F1.

a e i j e BRX2 c e eg e:
S ia eggia e e a BRX2 (e a e e ===)
S ia di a e e a c BRX2
(eggia e _ _ _).

FUNZIONAMENTO

Funzionamento di prova e verifica del funzionamento

1. A i e i c e chi di i ia de e ba i .
2. A i e a a aci e ca e a i ea di aff e a da a.
3. Me e e e i e a a i e, e-a e i dica i e di di e i e de ca a i .
4. Ri e i e ba i fi a i e di a-i a i e.
5. O a a a i a i a e a i e ba-i . O e a e a ced a di aggi a a e a e a di i ia.
6. S e a e e i di a i a i e i ga eggia e de a c a i e di i-e a a e e i d e , fi ch ia di a a e ca a.
7. Richi de e a e a di i ia c c e-chi e g a i i e.
8. Ve ifica e a e a de e ba i , de e ba i i e de e c d e edia e c a i i.

Modalità automatico

I f i e a a ic a da i a e de a a i e. A a fi e i e e a bi ic de e e e e a i i i e A a ic . Media e a c a i e di i e i eg a a, a a ie e a i a a e di a i a a a ec da de i e di i id e e ba i . I f i e de a a (c c i 300 a di e i f i-e) ie e i dica da di d i-e de.

ATTENZIONE! I ca di ecce i a i a i di aff (ad e . d e aggi ci e), a a-aci e ca e aff de e e e e i a a i d che a a i e di e e c -i i a f i a e a che i da i di c a i e a e (e f i e c i , a e i i e ic di i-ca d e de e de a a).

Modalità manuale

P a e i e e a bi ic i i i e Ma a e. La a f i a a i d i di e de e i e a i e de e ac e ef e i f i e c i . I aggi de e e e e e a e a a-i e a e a di i ia.

Disattivazione

P a e i e e a bi ic i i i e 0, a a a e a. L ia di a a e a c a e i f i e .

Pe i a i di a a i e e a-e i e a c a d a a a i i a e a i i e 0, be-acca e e a a da a e a.

Ispezione

Pe i a e e de a ic e a di f i e i de e e eg i e e i e e c i i de a a i e c e i-dei c eg e i dei bi.

MANUTENZIONE

C ig i di e eg i e a a e i e ec d e e EN 12056-4.

A fi e di ga a i e a ic e a di f i a-e d a a de a a i e, c ig i di a e c a di a e i e.

La a e i e de a a i e di e e ac e ef e e e i e e a a i e de e e e eg i e da e i a i e a i di 3 e i e e e e c e cia i, 6 e i e i c d i i 12 e i e e ca e f i-ia i).

P a di a ia i a , acca e a a de a a i e i d che a a i e a e e e e i e da a e e e.

Ve ifica e a e e a di da i chi-ici e ecca ici a e i ee i b di g a e a e e. Le i ee da eggia e ega e de e e e i e.

C ig i di e eg i e i eg e i a i i fa e di a e i e:

1. Ve ifica e a e a dei i di c ega-e i e i a d bie e ci c a e a e a i e a ba i i.
2. A i a e a a aci e ca; e ifica e i f i e age e, e e a e e e-g a e e b ifica e.
3. A e a e i ia de a a a di i-; c de a i i e e de a fe a (a a).
4. P i ia de a a e de a ea e e-edia e ici a e de a i ea; e ifica de a gi a e e de c ci e .

Le gi a i a e e-e a e b di affi a i.

5. C de i , e ece a i abb c-ca e ca bia e (e e e ca e a d i).
6. P i ia i e a de e ba i (e ece a-i a ec da di e ige e ecia i) ad e . e e i g a .
7. Ve ifica de a de e ba i di ac-c a.
8. La a e a a i e c ac a g i 2 a i.
9. Ve ifica de a a e e ica de a a-i e. I c a d i ece i a di a e i e, a ia e i a a acc a e, ece a i c a e eg a e e i f i e . A a i e i a di e i e e a e i ga-eggia e e e ba i fi ch a a e di ac a a a e e . Se e-ce a i i e i ga eggia e.

A e i e dei a i di a e i e, e-e e i f i e a a i e d a e e e-g i a a di f i e . Reda e c de a a e i e, i dica d i i a i e eg i e i da i e e ia i.

Controllo dell'olio

(Va id e a i i 08/2, 25/2 e 35/2). Pe a c a e g a e a e e i a e a e ag a e e a b g a i a a e e e a a c a gi a e da e-ba i . L a e a di i e e e de a ca e a de i de e e e e i a a da e e c a i e di chi a O i . Pe c a e a e di e a, a a i e id a di i de a ca e a de i ie e ca ica a e acc a i i i i .

Se i e e a ac a i ecce (a-e), ece a i i e i . C a e e e d a e 300 e di f i e , a ia a d 6 e i!

Se i c di ac a e a e a e e a ee, e a i de e i e a che a e di e a. Pe i c de a ca e a de i ibi e a e, a che i eg i , g i e e di de a a ecchi di c de a e-a "DKG" i ece de a i e di chi a "DKG".

Cambio olio

(Va id e a i i c de i di e 08/2, 25/2 e 35/2). Pe i i e de a ic e a di f i e i de e e e-g i e ca bi i d 300 e di f i e e a ca bi i d 1000 e di f i e . I ca di ca e di e di f i e i ca bi di i i de e e eg i e a e a a a .

Se ac a di ca ic ie e a c i-e e e ab a i e, i ca bi di i de e e e e eg i ad i e a i b e i.

Pe i ca bi de i i de e ii a e i e a e id a ic HLP de a c a e di i c da 22 a 46, ad e . N di ESSO DTE 22, DTE 24, DTE 25 di M bi .

La a di abb cc di 380 e e e M iC UC 08/2 M e 25/2 M e 1000 e e e M iF ee 25/2 BW e 35/2 BW.

La ca e a de i e e e abb cca a c a a di i i dica a. U - acca ic ca a e i g a de a a.

Controllo del gioco tra taglienti

(Va id e e e c gi a e). C - a e a i i e a da de e i i de a - ggia e de a a e de e i i di c ega e e fi aggi de i a a i e, i ge e e ece a i .

I ca di id i e de a e a di a - aggi , a e de a i i di f i - e a di i a i e i ffi- cie e (e de a a b ccaggi de a a) fa c a e a di a de a gia e e de g di i a i e da e e e e i i e e ece a i .

C e i e adeg a , ad e . e - e , i ibie i a e i gi c a a gie i a i e e a a di agi . Rid e e e a e gi c a agie i - e i e a 0,2 .

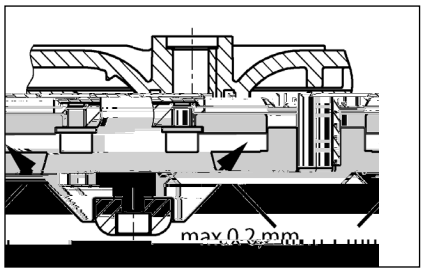

Regolazione del gioco tra taglienti

(Va id e e e c gi a e).

1. B cca e i e di agi c e di e ag i e a e a e e ag a e ce a e.
2. R e e e e e di e i e, i - e di agi e di c di eg a i e, i di e a e e e di e i e e i e di agi .
3. B cca e i e di agi e e a e - e e c a e ag a e (c a 8 N).
4. C a e a ibe di e e de e di agi e i a e e e i gi c a a 0,2).

Se i gi c a agie e ecce i , e - e e a di c di eg a i e. Ri e e e fa i 1-4.

PICCOLA GUIDA IN CASO DI ANOMALIE

La stazione non funziona

C a e e i e di e e, f ibi e e a - e. S i e i f ibi i dife i c f ibi i c g i e i a i i a i. I ca di a i a i e e a, c a a e e e ici a i e i i c ie i.

I f ibi e a b di e i e 2 A i e e i a f a e di c 230/12V, i a e e ci a di c e e a - e a a 230 V dife i. U f ibi e dife de e e e c de e e a e.

Li ea di a e a i e da eggia a, i - i e ad e a de d e

C a a i e ga eggia e b cca a = chi de e a a aci e ca de aff , a i e i c e chi di i ia e i b ccaggi .

La stazione non funziona, messaggio di allarme

I e a a e a e de e i di a i a ich a a b cca a = chi de e a a aci e ca de aff - , a e i e ba i , i a e a a, a e i g a a e e i b cc .

Prestazioni di pompaggio ridotte

Sa aci e ca e a i ea di a da a a e a c a e e e

[illegible]

INSTRUKCJE BEZPIECZEŃSTWA

[illegible]

UWAGA!

[illegible]

Kwalifikacje personelu

[illegible]

ZASTOSOWANIEH

G[illegible] e d [illegible] d c e ia [illegible] ie ciek feka ch c[illegible] i[illegible] iadaj ce fika LGA k[illegible] kcji i adaj d [illegible] a ia ciek i a acji a e i a ciek g da d[illegible] eg a c aj ka[illegible] k ad ie.

Zbi iki a a e a[illegible] ak a k ż 2[illegible] e a d i a c a ej 7 d i.

S e ik ie je a a , ec je ch i ed d ia a i[illegible] d k ej ed g g IP 44.

Je e i i a acja a a k a a a id a ek a acja db a g d ie e ac e i , ed e ik e ia aga ia ij ej D ek K[illegible] bi ci E ek[illegible] ag e c ej (EMC 2014/30/EU) i adaje d a az g da ach d[illegible] ch jak dbi ik d c d ieci a i a ia e ek c eg . W ad k d c e ia d ieci e ej a e e ie ak ad b biek e eg a i a i[illegible] e a a f a kieg a cia a e i ic ż ie a c aj c d ci a ak ce ia.

P dc a ek a acji i a acji a e e ega ż a a i k aj ch a a ka ch, jak a k ad:

- P ie ciek a e ka a i acji b d k i d ia ek (E ie EN 12050 a 12056)
- B d a i a acji i kieg a cia (Ni c ech VDE 0100)
- Be iec ez d ez i dk a c (Ni c ech Be SichV a BGR 500)
- Be iec ez i a acji ka a i ac j ch (Ni c ech GUV-V C5, GUV-R 104, GUV-R 126)
- I a acje i d e ia e ek c e (Ni c ech GUV-V A3)
- Och a ed ek j EN 60079-0, EN 60079-1, EN 60079-14, EN 60079-17:2007 a EN 1127-1

Zakres dostawy

- Zbi ik i) i k ie a ci k a d cie
- K a ka ed kc j a DN 150 / DN 100 d a c i 500 i 1000
- M fa a ad a a d a d ie a ia (c i 1200 c e ia e a c e bej i)
- K ie c e i d a ci g c eg
- Z c e e a c e bej i d a ci g c eg
- U c e ka (c e ki) ka e d a c ej i b a ej b da eg d DN 50
- Ma e ia c j ce d a bi ika
- K a a a d a ci g c eg (c i 300, 500, 1000 a 1200)
- S e ik (ie d c c i 300)

Tryb pracy: Praca przerywana S3, patrz dane techniczne

MONTAŻ

P a ia i a az ai a a ajak j ca i b abe e c ed . Ob k i ad e ki i e e i d egaj c i i ekcji i b d e a e ach az 60 - ce e e e ez b c .

Od ie a ie: R ci g d ie aj c a e ad iż ad dach.

D : Na d cie ed bi iki a e a d a iec c ej.

R ci g c : Za k a , ci g c a e ai a az a a d a iec c ej. Je e i k a ej b ak je ak e ie d a i a acji, ed a e a ż ce fik a e EN a .

R ci g c a e ad iż a ad ka i d e ia.

Ce d d ie ia ie c e ia ad ie ia i a acji a e e id ież d ad iaj c d ie k bi c .

UWAGA! W e kie b ce d c a ia c eg ch e e d bi ika je d k caż ak a e b 6 N .

Montaż zbiornika

Za k ż a a d cie ( ), ce i ie i ie ia ej cia d dc a a .

UWAGA! R ci gi c e i e i kich d ach b c ch ach c i 300 a e- i a aż i ie jak ajb ej i a acji ci ak a eg k a a a ia. K a i ie ież k ż c aj- iej 180 d d k a d i i i ad ie ia. Z d a ia d ki ie ej e d j ż d b d d i d a . Ce ik j cia eg a a e k aż d- ie e ie ci g d eg jeg aj- i kcie. R ci g d ie aj c a d c ż d d ie e ia bi- ika.

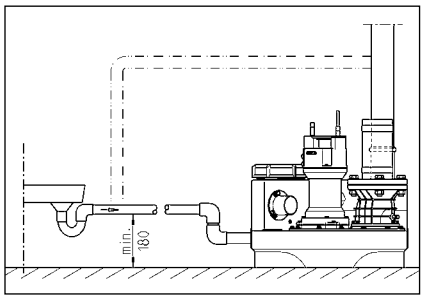

PRZYŁĄCZE ELEKTRYCZNE

P ace e ek c e , c ce b e ik a e- ecaż c ie fach c i .

P ed c ci e kich ac e ek c ch a e j ż c k i a acji g ia dka i a e iż, ab ie a i ie da e c e ie e b ecie.

UWAGA! W c ki iecí ej igd ie a aż d ie! W ikaj ca da e e d aż ak ce ia i k d e ia.

Na e e e egaż ak a ch i (e EN), e a k aj ch (e VDE) a e a i iej c eg ak ad e e ge c- eg .

U a aż a g d ż a cia iecí eg a ci i i a acji (a ab ic ka i i a)!

I a acje e iadaj e c iki e i a e ie ia, k e c aj b c aj e i e a e ci d a d. S g a ak c i eg a ej i a acji i f je e i ak ce ia d ia a ia, - ie i ed , gd je e ej ci e.

W e adk b i eg g a ia e i a jej c e ie e e- e je i e. P ed a ie c ak cež a e j ż c k g ia dka, gd g ci a je a- c e c e ie e . Be ed ia g a i acja e ek ie je ea i a a.

Instalacje na prąd przemienny

I a aci a e d c ż d e k a eg g ia da k eg ajd j- ceg i ch i ie c e i e ej e i d e ia i abe ec ż be- ec iki 16 A (be ad ci).

Instalacje na prąd trójfazowy

Ce k a ia c a e ek c eg d a e i a e e id ież a- id ai a a e, 5-bieg e g ia- d k e CEE, ajd j ce i ch ie c e i , e ej e i d - e ia (3/N/PE~230/400 V).

UWAGA! Jak e abe ec e ia e ek- c e i a acji a e aż c ie be ec iki be ad ci e b a a cha ak e ce C.

Montaż sterownika (nie dotyczy compli 300)

S e ik a e ek a aż c ie ch ch ie c e iach, e ej e i- d e ia, a jeg b d a e i a b ż a e k a. S e ik e i ie b ż a d e , c i i ka dej ch i i k e . W ka i g ż e ie a a k e i g e ad iż d k d e ia e ika.

Poziomy załączania i wyłączania

P k c a ia i c a ia a da da ch i a acji a i e fab c ie i da a da d ch k ci d .

Je e i c bie Paž i e k ci d , ed a e a defi i aż k a c a ia (ie d c c i 300), gd e d j ż d a ka ia a d cie.

I e e k a c a ia d a a a (+ 2) a e bci e iach c ch i a- acjach d e e ch (+4) a ia- e e e ik a e b a- a a c .

Ustalanie na nowo poziomu załączania (nie dotyczy compli 300)

Na ie c ż i a acji ch , e- c ik b c - 0 - a a a iż a 0. W eg a ie k a c a ia ea i je i d e We fika e a e- a a g ch - A a ga e e K1 e a ej ie e ika. P k a ie d a aż e c e k d- .

Na e fika e a a e a a g ch ajd j i d ie e ak a e P1 - P2 - P3.

- P1 = F kcja diag c a
- P2 ieci i = a d ajd je i ad e i a ia, ec je c e ed e i a ia
- P3 ieci i = a d i g e i- a ia

P k a e iż bi ik a d d ej k a- d i d d. P i a i ieciż k di da P2, a gd ieci i ie di da P3, ed a e d k aż eg acji.

P k b ciż bk eg ac j ajd - j c i e i ej di d P1 d a b kie- k g d chn ka ek ega- a. Te a a e a e ak bi ik e i ej e k c a ia i ciż b d- ie, ab a. Je e i ie a di da P3 a i i ada , ed e k b ciż bk e- g ac j a e b kie k g d- chn ka ek ega a i a ż e ie ak.

C ci e a aż ak d g , a di- da P3 e a ie i ieciż, a a e ie e ie b ciż bk eg ac j kie- k eci k d ch ka ek e- ga a, a di da P3 a a i e i e. P k a a ia a eg a .

Instalacja alarmowa

S g a e kach ea i a e a - c ie jak i ak c ie. Se j e, a- e e d d ia a ia ieci e ek c ej i a- acje a a e g a aj ak ce ia ac i ika e (c e a di da AD 00 i c i 300). Jed c e ie, da a je i eg a g a ak c . Te g a ak c a c ż jed ie e e i cie e ki b e jeg ge e a e d c e ie.

Je e iej ce e ie a a a ak- c g a i aci ak cež, ed g a a a e a e a i aż da ej e k be e cja (aci ki 40 i 41) a e cie b d (e adk c i 300 e c ce). Ze k ie g a i a- cji bí c ej a ak a bci a ż d 5A / 250V AC. S k ie a i i ci e ki.

Akumulator dla instalacji alarmowej (nie dotyczy compli 300)

U d e ie a a e je e j ie a e e d ieci e ek c ej - j. e adk a i- k d ie a a a i k a- ie d. Ce d ad e ia i a acji a a ej d d ia a ia ie e adk a ik d a e a aż ak a . O ż e c e d ic ki. P d c ż ak a d c a i a c aż g d ki e id ia iej c a a - c d a c ch e a a ek kab - ch. Ak a a e , je a ie a i aż d e a a a , e k. 1 g d i . P a ie i i a i a ia, ak- a je a a a c ie ad a .

Na ad a ak a d ia a e k 24 g d i , e e a ad a ie i ga i e 100 g d i ach ad a ia.

Na e eg a ie k aż a ż ak a a! W a ce a e d c ż g ieci i ak aż g a i aci kie- g a d. Na e ie d k a a ak c eg i e ki ka a i ie iej aż a a a ie ej a ci. Jeg ż k e a i a k. 5 a. Na e d- aż da c cia ek a acji i 5 a ach d k aż ia .

S aż ak a a c ie 9V! W adk a ia ba e- ii ch ch, je iebe ie- c eż ek ji!

Licznik godzin pracy

O j a ie, a e ik - aż ic ik g d i ac (ie d c c i

300). W ce a k ciż c a ic ika g d i ac d 8 i e k ż d g ia dek a ce iej c BSZ. Je e i adk eg c e ia i a acji ie a g a, ed a e ic ik g - d i ac b ciż 180 .

Wyłączenie wewnętrznego buczka alarmowego

Nie d c c i 300. Zdj ż g a k (BRX/BRX1). Ab ie aciż c ki, a e a ad iż k a ież 2-bieg - ej i e i ej.

Zewnętrzny buczek alarmowy (osprzęt)

O ż e c ed ic ki e ika.

D aci k "S+" a "S-" a d c ż d da k , b g a i a ak c a cie 12 V DC b e d ak . 30 A. B c ek a a g - c e ia c ż b c ż.

W adk i a acji c i 300 a jak a ż a a ie a e d iec i e ek c ej, a c k a je a bi ik d d cji.

W instalacjach z dwoma pompami: Zewnętrzna lampa błyskająca lub ostrzegawcza (osprzęt)

P d c ż 230V ak .1A) d aci k N a 41.

Zai a ek ie ciż aci k Uz a aci k 40. Ob d e ek c je a- be iec e F1.

U a iż k BRX2 a j c b:
La a b kaj ca be BRX2 e e e ===)
La a ega c a BRX2 igaj ce _ _ _).

EKSPLOATACJA

Próba działania i funkcji

1. O ż k c k bi ika.
2. O ż a a d cie i ci g c .
3. P d c ż i a acji d a cia, - ciż aa a g a i acji k ej ci fa i i a.
4. Na e iż bi ika d i a c a- ia.
5. P a c a i ia bi ik. D ia a ie i ddaż b e acji - e c k .
6. P d ie ż i c ie ak e - c a ia i a a d i a c a- ia, a d de ie i a a .
7. O c k k ż k i c e k .
8. P e ki ka c k i a c a ia a d iż c e ż bi ika, a a i ci - g .

tryb automatyczny

N a b ac i a acji je b a a c . W ce e c ik a e a iż a ci "A a ik". P - e i eg a e e c a ie a e e d i a je c a ie i c a ie i d ied i d a a e ie ia bi ika. P aca i k c i 300 g - ż d ac) g a i a a je ie d i d .

UWAGA! W adk j k d eg d (c a ie d ba e) a e a a d ie d a iż e b ab i a acja e i i g a ada ac aż a a bie e - a ia (ie aca ci g a, gd je a- g e ie eg a ia i ika i).

Tryb ręczny

P e c ik a iż a b c "Ha d". P a ac je ie a e ie d a i - ciek , bie ac ci g ej. Z eg - d d i a ie a e b e aż e c k .

Wyłączenie z ruchu

U a iż e c ik a "0", a je e b c e ie i .

W ce ach a a c ch i e i - ch e ika b i ie a- e aż cji "0" a e- c ik , ec a e ak i adk aż c k g ia dka.

Inspekcja

Ce a ia be iec ez a ek a- acji a e d k aż c ie i c ch k - i k ch i a acji, c ie - c e ia i a ci gach.

KONSERWACJA

Za eca d a d e ie e i a ia ed g EN 12056-4.

Ce a e ie ia a ej i be a a j ej ac Paź a i a acji a eca a a cie e i ej.

Se i a ie i a a e i - i ciek feka ch i b ż ad e e fach c c i ci c 3 ie i ce adk a aż biek ach bi eg k , 6 ie i c ch adk d ie - d i ch b 12 ie i c ch adk d jed d i ch.

P ed e c cie e kich ac e ek c ch a e j ż c k i a acji g ia dka i a e iż, ab ie a e ie da e c e- ie e b ecie.

S a d iż e d g - i c k d k k d ez c ika i echa ic i i che- ic i. P e d k d e b a a- a e a e ie iż.

P dc a e i a ia a eca e a- d e ie a j c ch ac:

1. Sk a ie iej c cez d k - ce ci e e g d i a a- i c e ia i a acji.
2. U ch ie ie a ; k a ie d g d a a ci ch , a ie k iec ci d eg a ie i a - a ie.
3. O a cie i c ce ie a eg ; k a g ia da i k ki (k a).
4. C ce ie i i ef iad j cej c i ci g ; k a i ika i k a ia.

Z e i iki g ież e k a d ie.

5. K a ej , e ie ie a b jeg ia a (ie je k a ej a).
6. C ce ie a bi ika (a e- ci d eb, g. g ce- g ch), a ie c .
7. K a ie a bi ika.
8. C 2 a a ka ie g e i a acji d .
9. K a e ek c ch k i e i - a acji. S e ik je be b g , a- e a a ż ak a , c d je k iec ż eg a ej k i jeg d ia a ia. O c eg , c ej a cia i a acji a e d ie ż - ak bi ik , a de ie i a a i - f j c k a ie d . O c eg , a e ci d eb a e c ciż a ak.

P k a i ac i ekc j ch a e ch iż i a aci e e e a- d e ie ch b d ia a ia. Na a e i a ia a e d iż k da ie kich c ci i i ch da ch.

Kontrola stanu oleju

(Od i j k d i a acji 08/2, 25/2 a 35/2). W ie ej k ej ci a e - aż b e ci k e i i b e k i i j ż a a i ikie e bi ika. O d a e ia ia i - c a ia ej k j e c e ia d e bk a ". W ce k - i i g ch ie cie i c e iaj c ch a e ca k icie, a e k i ciż ej k ej ej d c eg ac ia ia eg .

Je i d ej ed a a i da (k - ec), ed ej a e ie iż. Sk a aż ie da ch 300 g d i ach ac , jed ak ak a ie 6 ie i cach!
Je i d ej ada ed aje i da a c ec ki a iec c ez, ed c ej a e d k aż ia i g ch ie cie i c e iaj c ch. Ce k i a ie k ej ej k a a a aż d da k e ek e a eg d e ia ceg d k i

c e ci DKG" i k ciż j iej ce bki a aj cej a DKG .

Wymiana oleju

(Od i k d i a acji i 08/2, 25/2 a 35/2). Ce i g ia be - iec eż a ek acji a e e ie ie ej ie iż 300 b - c g d i ach, a a e 1000 b c - g d i ach. W adk i kieg ebieg ie eg b c g d i ach a e d - k aż ia ej ie ad iej a k .

W adk ciek d ie kach cie - ch, ia ej a e d k aż c - ciej.

D ia k e ej ej a e - aż i e a ej h d a ic HLP k a ie k ci d 22 d 46, M bi DTE 22, DTE 24, DTE 25.

I ż a e ia ia i 380 adk M iC UC 08/2 M a 25/2 M, a 1000 d a M iF ee 25/2 BW i 35/2 BW.

K ej a e iaż c ie i ci ej . P a e ia ie - ad i d k d e ia .

Kontrola luzu cięcia

(Od i k d i ikia - c) K aż b b d a b c e i e i a c ach i a - ac j ch d g d a id eg d - k ce ia i a ie eb d k ciż.

W adk ie ia b k e ia daj - ci c e ia, cegł ha a a - cegł ac b iej aj cej daj ci ci cia (b k a ie i) a e eciż fach c k i ika i echa i d ab ia ia i a ie k iec ci d k aż ia .

L ci cia j c i d i ikia c i c a ie ż d - ied i da i, c e i ie - . L ci cia ej 0,2 a e iej ż.

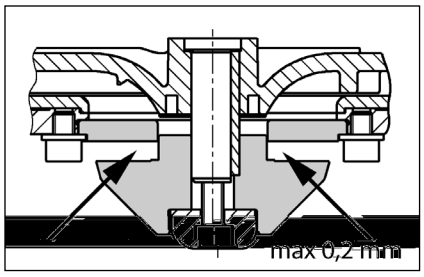

Regulacja luzu cięcia

(Od i k d i ikia - c).

1. Zab k aż ka a kia d e a i ik - c i k ciż ce a b i b .

2. Zdj ż k a k d ci k , i ik c i jed dk adk eg ac j , a a ie a ad iż k a k d ci k i i ik c .

3. Zab k aż i ik c i k ciż g ie b i b e d k - ca ia 8 N).

4. S a d iż ekk ż ch b eg i - ika ceg i ie ie ż ci cia ak . 0,2).

Je e i ci cia je b b d , ed a e ż a dk adk eg a- c j . Na e ż ki d 1 d 4.

MAŁY PORADNIK USUWANIA ZAKŁÓCEŃ

Instalacja nie działa

S a d iż a cie iecí e, be iec ik i c ik ic d U k - d e be iec iki a e ie iaż a akie e d g d a e i ch. W adk a a- j ceg ad ia a ia a e e aż e ek ka b ac ik d ia b gi k ie a e d ce a.
U k d e be iec k a k 2 A a f a a e- j ceg 230/12V, be iec ik i ik a dej cie a d ie 230 V.
U k d e be iec iki a e ie- iaż a akie e d g d a- e i ch.
U k d kabe c a iecí eg, a a e eciż c ie d - ce i
Zab k a c ik ak = a- k ż a a d cie, ż - k c k i ż b kad .

Instalacja nie działa, sygnał alarmowy

Te a je iach i ika a b d, gd a a b kada = k ż a a d cie, iż bi ik, j ż c k iecí , de- aż i ż b - kad .

Zmniejszona wydajność tłoczenia

Za a ci g c ie a a ca k icie a a
Za ka ci g c =a a każ - ci g c
Za ka a k a a a= k ż a (adk c i 300 iż - ci g c) i c ciż k a
Za ka e d ie e ie = c ciż ci g a- bi ik i k aż .

Pali się sygnalizacja "Drehfeld falsch"

[illegible]

BEZPEČNOSTNÍ POKYNY

[illegible]

POZOR! [illegible]

Kvalifikace personálu

[illegible]

Bezpečný způsob práce

[illegible]

Bezpečnostní pokyny pro provozovatele/obsluhu

[illegible]

Bezpečnostní pokyny pro montážní, kontrolní a údržbářské práce

[illegible]

Svévolná přestavba a výroba náhradních dílů

[illegible]

Nepřípustné způsoby provozu

[illegible]

Pokyny pro prevenci úrazů

[illegible]

POUŽITÍ

Za [illegible] fek ii c[illegible] i, [illegible] i- [illegible] a [illegible] k a [illegible] je je [illegible] d k [illegible] e LGA a je h d k [illegible] e e [illegible] d [illegible] ad d [illegible] a e [illegible] a [illegible] a [illegible] d d [illegible] c [illegible] b- k [illegible] i [illegible] ad [illegible] i.

N d [illegible] e [illegible] h b [illegible] a [illegible] e [illegible] a [illegible] [illegible] - k 2 [illegible] d h [illegible] ce [illegible] d d b [illegible] ejd e 7 d [illegible] .

[illegible] d c jed [illegible] ka [illegible] e [illegible] b [illegible] a [illegible] e a, je a e ch [illegible] a [illegible] i [illegible] kaj c [illegible] d [illegible] d e IP 44.

P [illegible] d [illegible] a aci a d [illegible] [illegible] [illegible] - [illegible] je d c jed [illegible] ka [illegible] ada k ch a [illegible] d e [illegible] ice EMC 2014/30/EU a je h d [illegible] [illegible] [illegible] d [illegible] c [illegible] ech e e ej [illegible] i [illegible] - b [illegible] e ek [illegible] ck [illegible] [illegible] d [illegible] . P i [illegible] je d [illegible] [illegible] [illegible] [illegible] ci [illegible] jak h [illegible] [illegible] - h [illegible] d ik e [illegible] b [illegible] a [illegible] h [illegible] k a [illegible] h [illegible] a f [illegible] je [illegible] a [illegible] ch k [illegible] a [illegible] ed [illegible] a e [illegible] d [illegible] [illegible] i [illegible] e .

P i [illegible] a e [illegible] b [illegible] d d [illegible] [illegible] [illegible] ad [illegible] d k , [illegible] ed [illegible] a [illegible] [illegible] h [illegible] k , jak a [illegible]

- e [illegible] ac [illegible] a ice d [illegible] ad ch d [illegible] b d - a [illegible] k (a [illegible]. E [illegible] EN 12050 a 12056)
- Z i [illegible] k a [illegible] ch a e (a [illegible]. N [illegible] eck VDE 0100)
- Be [illegible] a [illegible] ac [illegible] edk (a [illegible]. N [illegible] eck Be SichV a BGR 500)
- Be [illegible] ech ick ch a e [illegible] [illegible] k d (a [illegible]. N [illegible] eck GUV- -V C5, GUV-R 104, GUV-R 126)
- E ek ick a e a [illegible] edk (a [illegible]. N [illegible] eck GUV-V A3)
- Och a a [illegible] i [illegible] i EN 60079-0, EN 60079-1, EN 60079-14, EN 60079-17 a EN 1127-1

Rozsah dodávky

N d [illegible] e [illegible] ad [illegible] ( ) a [illegible] ac [illegible] b [illegible] k
Red kce DN 150 / DN 100 [illegible] c[illegible] i 500 a 1000
P e e [illegible] jka [illegible] (c[illegible] i 1200 e a ick [illegible] jk e k)
P [illegible] j ac [illegible] ba [illegible] ak [illegible] b
E a ick [illegible] jka e k [illegible] i [illegible] ak [illegible] b
N ( ) [illegible] [illegible] [illegible] [illegible] b [illegible] - e [illegible] ad eb da [illegible] k DN 50
U [illegible] ac [illegible] e i d e
Z [illegible] ka [illegible] ak h [illegible] b (c[illegible] i 300, 500, 1000 a 1200)
[illegible] d c jed [illegible] ka (e c[illegible] i 300)

Druh provozu: Přerušovaný provoz S3, viz technická data

MONTÁŽ

P e e [illegible] ac a e [illegible] b [illegible] [illegible] [illegible] [illegible] [illegible] ak, ab d a [illegible] ak a b [illegible] [illegible] j- c . Ved e a ad [illegible] i [illegible] i, k e [illegible] k b e a [illegible] d b , [illegible] b k di [illegible] ici [illegible] ac [illegible] [illegible] i k , e [illegible] k [illegible] i [illegible] 60 [illegible] .

Od [illegible] : V [illegible] ac [illegible] b [illegible] b e- de [illegible] ad ech .

P k: V [illegible] k [illegible] b [illegible] ed d [illegible] [illegible] [illegible] [illegible] k e i [illegible] d .

Tak [illegible] b : Za [illegible] k a k ak - h [illegible] b [illegible] b [illegible] [illegible] da [illegible] [illegible] [illegible] k e i [illegible] d . P k d e [illegible] k a ka [illegible] d d k a e , [illegible] de b a- [illegible] [illegible] a b a a [illegible] i [illegible] [illegible] k .

Tak [illegible] b [illegible] [illegible] d b [illegible] k ede- [illegible] ad k [illegible] [illegible] h d .

P [illegible] d d [illegible] [illegible] [illegible] i a ace je [illegible] aji [illegible] d e [illegible] ac [illegible] k .

POZOR! V [illegible] ech [illegible] b , k e [illegible] k [illegible] e - [illegible] [illegible] a d i, [illegible] j b [illegible] e [illegible] a [illegible] [illegible] [illegible] [illegible] 6 N [illegible] .

Montáž nádrže

[illegible] [illegible] k [illegible] k [illegible] [illegible]) [illegible] ab - [illegible] ik [illegible] d [illegible] b h [illegible] [illegible] e a- e e.

compli 300. V [illegible] e [illegible] [illegible] [illegible] ad a [illegible] k DN 100 [illegible] a [illegible] eb ah e [illegible] d [illegible] k 102 eb [illegible] e ac [illegible] [illegible] - [illegible] a e a djeh e e jej. P [illegible] je [illegible] - ac [illegible] b ehce [illegible] e [illegible] e [illegible] ih a [illegible] i [illegible] b a [illegible] k.

[illegible] he k [illegible] k e a e [illegible] [illegible] b j e a d a [illegible] a e e [illegible] ac [illegible] - b [illegible] [illegible] e a [illegible] k [illegible] b [illegible] a d - a .

P [illegible] ak e e e a k [illegible] [illegible] d ah [illegible] [illegible] - di k , [illegible] e [illegible] a [illegible] e [illegible] di k .

N je [illegible] [illegible] [illegible] ac [illegible] b [illegible] e [illegible] [illegible] h- [illegible] a a e k [illegible] k [illegible] d a e [illegible] b d d e a a [illegible] d [illegible] ka i.

Všechny ostatní typy compli P e e [illegible] ac a e e [illegible] ac [illegible] b [illegible] [illegible] e [illegible] [illegible] - [illegible] k [illegible] b [illegible] a d a a e i [illegible] e [illegible] h .

Je [illegible] e [illegible] b [illegible] [illegible] [illegible] a [illegible] [illegible] d DN 150, [illegible] ak [illegible] b [illegible] ejd e [illegible] e a ba e [illegible] e [illegible] [illegible] c d [illegible] k 152 [illegible] [illegible] a e- . S a da d [illegible] d [illegible] b [illegible] [illegible] a e a [illegible] [illegible] a ac [illegible] [illegible] a [illegible] [illegible]) a h adi a a [illegible] [illegible] b [illegible] [illegible] a e a.

Pokyn: U a e c[illegible] i 500 a 1000 [illegible] e b e ik [illegible] k [illegible] e a DN 150 a DN 100 [illegible] ak, [illegible] e e [illegible] i [illegible] e [illegible] ed kce e [illegible] e [illegible] d [illegible] ac [illegible] b .

Pe [illegible] [illegible] h [illegible] e [illegible] ih a [illegible] [illegible] b [illegible] ac [illegible] b .

[illegible] a e a [illegible] e [illegible] [illegible] e [illegible] [illegible] [illegible] d [illegible] e d [illegible] d ah .

O [illegible] [illegible] d [illegible] e [illegible] e [illegible] [illegible] [illegible] e [illegible] b d d e a [illegible] d [illegible] k a [illegible] [illegible] di k a [illegible] e [illegible] [illegible] i- [illegible] h [illegible] e.

POZOR! [illegible] b [illegible] [illegible] h [illegible] e [illegible] e [illegible] ak, ab e [illegible] d [illegible] e def [illegible] a a, ji ak h [illegible] ebe [illegible] e [illegible] [illegible] i.

U a e k [illegible] k [illegible] ad c[illegible] i 1200 e [illegible] d [illegible] je [illegible] a c [illegible] e [illegible] d [illegible] a [illegible] a [illegible] i he k .

Montáž větrání

Od [illegible] ac [illegible] b [illegible] e [illegible] [illegible] bj k DN 70 [illegible] je [illegible] a [illegible] ah e a [illegible] d [illegible] i a - e [illegible] e ad [illegible] ech .

U a e c[illegible] i 1200 [illegible] ad h [illegible] [illegible] a [illegible] [illegible] 78 [illegible] [illegible] d [illegible] e a [illegible] a e a [illegible] djeh e e. N [illegible] je d [illegible] ac [illegible] b e a ick [illegible] jk DN 70 a e [illegible] e ad [illegible] ech .

Montáž tlakového potrubí

Na [illegible] [illegible] b [illegible] [illegible] je:
1. [illegible] k a k [illegible] k d e [illegible] [illegible] d d k)
2. a ac [illegible] [illegible] k [illegible] [illegible] e [illegible])
3. [illegible] j ac [illegible] b a
4. [illegible] je e a ick [illegible] jk [illegible] ak [illegible] b a [illegible] d b [illegible] k e [illegible] e ad [illegible] k [illegible] e [illegible] h d .

Připojení DN 50 vertikálně k nouzovému vypouštění

Ta [illegible] [illegible] jka e [illegible] [illegible] [illegible] je [illegible] - h [illegible] b [illegible] h e ad a.

O [illegible] a e dd [illegible] e [illegible] k [illegible] d jk a djeh e e.

Na a [illegible] e [illegible] [illegible] 58/50.

P [illegible] k [illegible] b [illegible] [illegible] [illegible] [illegible] [illegible] 50 [illegible] [illegible] [illegible] [illegible] d [illegible] d - e. V d e [illegible] de d a [illegible] d e b [illegible] [illegible] b 50 [illegible] .

R [illegible] [illegible] b [illegible] e ad [illegible] e [illegible] e a e [illegible] ak, ab [illegible] d b e [illegible] , [illegible] je jej a [illegible] bk a [illegible] je ak [illegible] b [illegible] h [illegible] b [illegible] h e ad a.

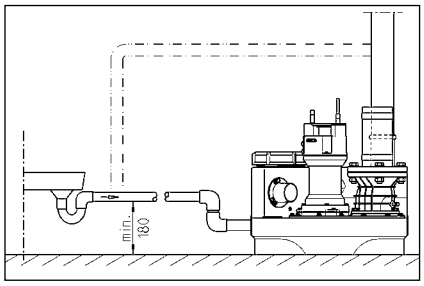

ELEKTRICKÉ PŘIPOJENÍ

P ce a e ad , k ek ´ eb e j b d je k a- ifik a e ek ech ik .

P ed kd ac h e k a e a abe e e, ab a e h ji b a- ji d a .

POZOR! S k ikd e k dej e d d ! P ad ik da e a edek ch a k e .

Je d d a ech a (a . EN), (a .. VDE), jak i ed ch a e e - ge ick ch .

D d j e a (i k ek)!

Za e aj b d e e h adi- , k e e ad i i a a d a e, e ek i e e. Z k e ab d a h a h a e ig a i- je f k ch i ehd , k d je e ech d .

P k d e e ad i h , e a- i je e. P ed d a e i ch b a e a e ch i a e . T a ch a e e h e a.

Zařízení se střídavým proudem

Za e b je e d d ai a a k , k e je a ch b a i ad d a je aji a ji k 16 A (a).

Zařízení se třífázovým proudem

E ek ick je e e ac h a e- b ede 5 k CEE, ai a a d e ed , k e je a ch b a i ad h adi d (3/N/PE~230/400 V).

POZOR! Jak ji k a e je - a e e a ji k eb a a C cha ak e i ik .

Montáž řídící jednotky (ne u compli 300)

d c jed ka b a ch b a i ad h adi d a jej k b d a e a. d c jed ka b d b e , ab b a kd k i jej k a. V k hk d ch a k de- a da e d c jed k i i .

Hladiny spínání

B d a a j i b a- a e a a da d k k h a e .

P k d e ji k , e defi a b d a (e c i 300), e ji ak e d j ke d - k .

Da a ac b d ach (+ 2) a d j ch a e k (+4) ak d c jed ka a a a ick .

Nové určení hladiny zapnutí (ne u compli 300)

Za e a ech d d b d k i- d , a d -0-a a ika. (Ha d-0-A a ik) a a i d h 0. Se e b d a e d d - A a g h d c a K1. a a e . Od a e a ech d d b h ed k d .

Na a g h d c a i e ach ej i e di d , k e j a e P1 - P2 - P3.

M[illegible]ek BRX2 [illegible]:
B[illegible]k be BRX2 [illegible] ===)
[illegible] BRX2 (b ik [illegible]).

PROVOZ

Zkušební běh a funkční zkouška

1. O[illegible]e [illegible]e i [illegible]c k [illegible] d[illegible]e.
2. O[illegible]e [illegible]e [illegible] [illegible]ka [illegible] k [illegible] a [illegible]ak-[illegible] b.
3. P[illegible]e a [illegible] a [illegible], k [illegible] [illegible]e i dikaci [illegible] [illegible] e [illegible] e.
4. Na[illegible] d[illegible] [illegible] h adi [illegible].
5. [illegible] e [illegible]ad [illegible] e [illegible] a [illegible] e a [illegible] d [illegible] d[illegible]. S ed [illegible]e [illegible] b[illegible]h e [illegible] i [illegible] [illegible].
6. P[illegible] k [illegible] a e h adi [illegible] a [illegible] e-de[illegible]e ad b d a[illegible], [illegible] [illegible] a-[illegible] [illegible].
7. [illegible] i c [illegible] [illegible] ak [illegible]e k [illegible] a[illegible]-[illegible].
8. N[illegible] k ika [illegible] [illegible] a [illegible] i [illegible] i [illegible]ek [illegible] [illegible]e[illegible] [illegible] d[illegible]e, a[illegible] a[illegible] a[illegible] b.

Automatický provoz

A[illegible] a[illegible]ick [illegible] [illegible] je [illegible] d h[illegible]-[illegible] a e. K[illegible] [illegible] e [illegible] b[illegible] k b-k [illegible] a [illegible] e "a[illegible] a[illegible]ika". I[illegible]eg[illegible]-[illegible] b d[illegible] e [illegible] h adi [illegible] a[illegible] e[illegible]ad [illegible] d e [illegible]a ka[illegible]a i [illegible]-d[illegible]i. P[illegible] e[illegible]ad a (c[illegible] [illegible]i 300[illegible] [illegible] h[illegible] [illegible]) je i dik[illegible] e e [illegible] di d[illegible].

POZOR! P i [illegible] e [illegible] k[illegible] [illegible] k (a [illegible] k ad [illegible]i [illegible] ba [illegible]) [illegible] b[illegible] [illegible] k [illegible] k [illegible] a[illegible] ik [illegible]k ce[illegible], ab [illegible]e e[illegible] ac a e i ad e [illegible]ac a[illegible] [illegible] [illegible] [illegible] ad[illegible] [illegible] [illegible] (d [illegible] a [illegible] [illegible], ji ak [illegible] ik [illegible] ebe [illegible]e [illegible]eh [illegible]-[illegible] e[illegible]ad a).

Ruční provoz

K[illegible] bk[illegible] [illegible] a [illegible] a[illegible]e d [illegible] ice" [illegible]". [illegible] e[illegible]ad [illegible] [illegible]ac je [illegible] e [illegible] a [illegible] i [illegible]a[illegible]k [illegible] d [illegible] a [illegible] [illegible]. P[illegible] b[illegible]h [illegible] d e[illegible] [illegible] b [illegible] b[illegible] ed[illegible] i-[illegible] [illegible].

Vypnutí

K[illegible] bk[illegible] [illegible] a [illegible] a[illegible]e d [illegible] ice "0", e[illegible]ad [illegible] je [illegible] [illegible]. P[illegible]a[illegible] a e je d e[illegible]a e [illegible] k[illegible] [illegible].

P[illegible]a a d[illegible] b d c jed[illegible]k [illegible]eb e[illegible]ad a [illegible] [illegible] ej[illegible]e [illegible] ici "0", [illegible] b[illegible] [illegible]d [illegible] h[illegible]e [illegible] [illegible] k e [illegible] k.

Inspekce

P[illegible] ach[illegible] [illegible] [illegible] be[illegible]e [illegible] i je [illegible] ká[illegible] d[illegible] [illegible] c[illegible] d[illegible] [illegible]ick k [illegible] a-[illegible] e, e[illegible] [illegible] jek[illegible] b.

ÚDRŽBA

D[illegible] j[illegible] e[illegible] d[illegible] d[illegible] b [illegible] d e [illegible]a-[illegible] e EN 12056-4.

P[illegible] aji[illegible] [illegible] a [illegible] [illegible] be[illegible]e [illegible] i Va[illegible]eh a e V[illegible] d[illegible] j[illegible] e a [illegible] [illegible] d[illegible] b[illegible].

[illegible] d[illegible] b a e [illegible] a [illegible]e e[illegible] [illegible] fek i a[illegible] i [illegible] j[illegible] [illegible] d[illegible] [illegible] db [illegible] ci [illegible]e a ech 3[illegible] [illegible] [illegible] [illegible] d ik[illegible] f e, 6[illegible] [illegible] [illegible] j[illegible] ch d-[illegible] ech ce b [illegible] a 12[illegible] [illegible] [illegible] di [illegible] ch d-[illegible] ech.

P ed ká[illegible] d[illegible] ac [illegible] h[illegible]e [illegible] [illegible] k a e a [illegible]abe[illegible]e, ab [illegible] a e [illegible] h ji [illegible] b[illegible] a-[illegible] j[illegible] d[illegible] a[illegible].

S[illegible] jk a g[illegible] hadice[illegible]ek [illegible]-[illegible]e a[illegible] echa ick a ch[illegible] ick [illegible]k e. P[illegible]k e i[illegible]e[illegible] e-[illegible] b[illegible] ej b [illegible] [illegible] a.

D[illegible] j[illegible] e[illegible] d[illegible] b[illegible] [illegible] d[illegible] ed-j c[illegible] ce:

1. K[illegible] [illegible] a[illegible] [illegible] e f[illegible] [illegible] h e-d [illegible] k a e a a[illegible] a[illegible].
2. U ede[illegible] [illegible] [illegible]ek d [illegible] h b, k [illegible] a ehk [illegible] ch d, [illegible]ad [illegible] e e a a-[illegible] a[illegible].
3. O[illegible]e e a [illegible] b a [illegible] i [illegible]-[illegible] k, k [illegible] a[illegible] h a k e (ka[illegible]k).
4. V [illegible] e[illegible]ad a a be[illegible] [illegible] ed[illegible] [illegible]-je k [illegible] [illegible] i, k [illegible] a [illegible] h k a a [illegible] e.

O[illegible] ebe[illegible] b[illegible] k a[illegible] [illegible] [illegible] h a.

5. K[illegible] a eje, [illegible]ad [illegible] d[illegible] [illegible], eb [illegible] a eje [illegible]k d je k di[illegible] ici ej [illegible] k[illegible] a).
6. V [illegible] i k [illegible] d[illegible] e ([illegible]ad [illegible] e-b, e [illegible] d e [illegible]ci ch[illegible] ada k[illegible]), a [illegible]. d [illegible] a[illegible] [illegible] k.
7. K[illegible] a [illegible]a b[illegible] [illegible] d[illegible] e.
8. Ká[illegible] d 2 k [illegible] ch[illegible] a e [illegible] d.
9. K[illegible] a e ek[illegible] ick [illegible] i a e [illegible] d-c jed[illegible]ka jak[illegible]ak je be d[illegible] b, [illegible] k d je [illegible]ak ab d[illegible] ak[illegible] [illegible] je [illegible] jej[illegible]a ide[illegible] k[illegible] [illegible] a[illegible] a f k-[illegible]. K[illegible] [illegible] e edej[illegible]e[illegible] i a e be [illegible] [illegible] ab

2. V [illegible] ici, e [illegible] a - c a [illegible] d [illegible] k a [illegible] ak [illegible] a i- ci a e [illegible] a [illegible] e.

3. e [illegible] ab k [illegible] e a [illegible] e [illegible] h- [illegible] e [illegible] b [illegible] [illegible] e ih a [illegible] - [illegible] e [illegible] e 8 N [illegible]).

4. Zk [illegible] e [illegible] ch d e h [illegible] a [illegible] e [illegible] a [illegible] 0,2 [illegible]).

P k d je e [illegible] a [illegible] e je [illegible] i [illegible] e k , je [illegible] d a [illegible] da [illegible] c a [illegible] d [illegible] . Je [illegible] ak a k k 1-4.

MALÁ POMOC PŘI PORUCHÁCH

Zařízení neběží

P ek [illegible] je a [illegible] i, [illegible] ji k a ch i Fl. Vad [illegible] ji k ah a [illegible] e [illegible] e [illegible] ji ka [illegible] i [illegible] ej ch [illegible] e ech. P i [illegible] ak a [illegible] aji [illegible] e [illegible] c db ka e ek ice eb ka ick e i .

I e k e [illegible] bi k [illegible] ji ka 2A [illegible] a [illegible] d c a f [illegible] 230/12V, ka [illegible] a [illegible] da h [illegible] d 230 V je ad . Vad [illegible] ji ka [illegible] e b ah a e a [illegible] e [illegible] k ej h [illegible] a h d .

S [illegible] d [illegible] k e , [illegible] - [illegible] e bce

Ob d [illegible] k je ab k a = a e e [illegible] k [illegible] k , e e i c k a d a e ab k .

Zařízení neběží, hlášení poplachu

Te [illegible] a e i [illegible] , [illegible] - e e ad je ab k a = a e e [illegible] - [illegible] k , [illegible] d e d , h- [illegible] k , d [illegible] je k e ad a a d a e ab k .

Snížený čerpací výkon

[illegible] k ak [illegible] b e ce a e e

Zab k a ak [illegible] b = [illegible] ch- [illegible] e ak [illegible] b

Zab k a [illegible] k a ka = a e e [illegible] - [illegible] k ([illegible] c [illegible] i 300 [illegible] d [illegible] e a- k [illegible] b) a i [illegible] e [illegible] k a k

Od [illegible] e ad a je ab k a = - i [illegible] e d [illegible] ac hadi k d e e a- d a a k [illegible] je [illegible] .

Svítí indikace "Drehfeld falsch" (chybné točivé pole, pouze motorový proud)

P ad f [illegible] ch b , eb jed a f e ch b , [illegible] e ad [illegible] a , eb [illegible] d- k = [illegible] jk [illegible] e k g - a [illegible] e db k b a i e ek ik .

Svítí kontrolka "Störung Pumpe" (porucha čerpadla, ne u compli 300)

P ch a e ad a je k di [illegible] ici ji i , k e e ad [illegible] e [illegible] i [illegible] e , eb e ek ick [illegible] e [illegible] . Te [illegible] ji i [illegible] b [illegible] ede e ad a d [illegible] . dic jed [illegible] ka [illegible] e a [illegible] e db k b a i e ek ik .

Svítí kontrolka "Hochwasser" (záplava, ne u compli 300)

S a d d i je i ed a e h e eb ad h k i

[illegible]

BEZPEČNOSTNÉ POKYNY

[illegible]

POZOR!

[illegible]

Kvalifikácia personálu

[illegible]

Bezpečná práca

[illegible]

Bezpečnostné pokyny pre prevádzkovateľa/obsluhu

[illegible]

Bezpečnostné pokyny pre práce v súvislosti s montážou, revíziami a údržbou

[illegible]

Svojvoľné prestavby a výroba náhradných dielcov

[illegible]

Neprípustné spôsoby použitia

[illegible]

Pokyny na prevenciu pred úrazmi

[illegible]

POUŽITIE

Za iade ia c i a e e a ie fek i a e a je ie, aj e a k kcie LGA a h dia a a e e a ie d ad ch d a ie a , ak aj d cej a k ej d b k ie e .

N d e b a a e a k 2 d h d ca a a ajd h ie 7 d .

Riade ie a e a a je, a e je ch e i iekaj cej de d a IP 44.

P i a cii d a ed a iade ie iada k ch- a e ice EMC 2014/30/EU a je h d e i ie d c ed a ja- e ej ej e ek ickej ie e. P i je a ie e ie ci ie e h d ik a ja a h k a- h a f a je d a k eb a a ed a d - i e i .

P i a a iade a ia d d ia a d k , ed , ak aj ie e a e ia, ak a .

- P e e acie a iade ia a d ad d d e d d e ie b d a k (a . E e EN 12050 a 12056)
- Z ia (a ie k a ch a iade (a . N eck VDE 0100)
- Be e a ac e iedk (a . N eck Be SichV a BGR 500)
- Be e ech ick ch a iade iach d ad ch d (a . N eck GUV-V C5, GUV-R 104, GUV-R 126)
- E ek ick a iade ia a e d k - iedk (a . N eck GUV-V A3)
- Och a a ed b ch EN 60079-0, EN 60079-1, EN 60079-14, EN 60079-17 a EN 1127-1

Rozsah dodávky

- d e ad /- i a ah acia - ba e k
- ed kcia DN 150 / DN 100 e c i 500 a 1000
- e e bj ka e e a ie (c i 1200 e a ick je ia hadic - j- k)
- j acia ba e a ede ie e a ick je ie hadic i jk i e a ede ie
- a acie e e ie/- a e b - e ad a eb a k DN 50 e ac a e j e d k ka ka e a ede ie (c i - i 300, 500, 1000 a 1200)
- iade ie (ie c i 300)

Prevádzkový režim: 7EMC0EMC ETEMC /Span 8 1 TA6. (k1 T2MC /Span 8 0TEk)15.ET-4ks TA6. (k1 T2T-4)-6(k)1im rMCID 8224 BDC BT/T10 1 Tf0.015 Tc

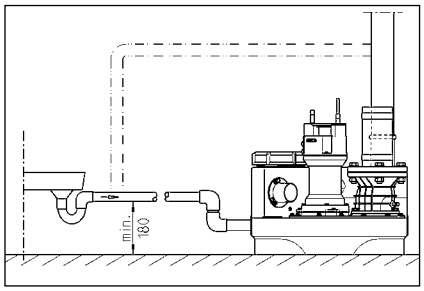

ELEKTRICKÉ PRIPOJENIE

E ek ick ce a e ad e, - ke a eb iade ie k - a e db e ek ik .

P ed ká d c iah ie ie- k a iade ia a abe - e e, ab i b h i jí a iade ia k a i .

POZOR! Sie k ikd e e d d ! P ad ik da e ie k ch a k de i .

P i je eb d d ia a ecifick e k aji (a . EN), ed ecifick e ch e d k a e e ek ickej ie e.

D d ia aj e e d k a ie i - k)!

Za iade ia aj h adi a ie, k e ad , e i e d a d , a e e e. P a ie ab d a h a iade ia ig a i je, e d k f k ej che, aj ke je e ech d .

Ak je e ad i ah ia e, e a - ed c e a i ia. P ed d- e e i ch a iah ie ka, e e a i ak e ad ch ad i e e a e. P ia e h e ie ch a e k .

Zariadenia v striedavom prúde

Za iade ie a ie je d k i - a ej d a ed , k a ach - d a chej ie i ad f h de ia a je i e 16 A a) i k .

Zariadenia v trojfázovom prúde

P e e ek ick je ie e e acieh a iade ia je eb a a 5- k CEE i a a d a ed , k a ach d a chej ie i ad f h de ia (3/N/PE~230/400 V).

POZOR! Ak ed ade i k e a iade- ie a e je e a i k a eb a a a cha ak e i ik C.

Montáž riadenia (nie compli 300)

Riade ie e d k je e ch ch ie - iach ad f h de ia a k d ia aj e d a e . Riade ie b d b e , ab b ked k - ek k a k . V k hk d ch a k de a da iade ie i

Spínacie hladiny

Za acie a acie b d d b a- a e e a da d k k - h a iade ia.

P ki b e i i i k k , ak e a ac b d defi a a (ie c i 300), e e b i ak ad e h d j k cha i k .

I [illegible] a [illegible] d [illegible] e [illegible] k [illegible] e [illegible] d [illegible] k U - [illegible] a 40. E ek [illegible] ick [illegible] k h je abe [illegible] e e [illegible] F1.

Z [illegible] k [illegible] e [illegible] ie BRX2 [illegible] a [illegible] a [illegible] e [illegible] a ed [illegible] e:
e [illegible] e [illegible] aj k be BRX2
([illegible] e [illegible] a [illegible] e ===)
[illegible] a [illegible] e [illegible] BRX2
(b ikaj ca _ _ _)

PREVÁDZKA

Skúšobná prevádzka a funkčná skúška

1. O [illegible] e i [illegible] iaci k [illegible] a [illegible] d [illegible] i.
2. O [illegible] e [illegible] a [illegible] K a [illegible] a [illegible] e-de [illegible].
3. Za iade [illegible] ie [illegible] je [illegible] a [illegible] a [illegible] ie, d [illegible] d [illegible] e ka [illegible] a [illegible] e ed f [illegible].
4. N d [illegible] a [illegible] e a [illegible] a [illegible] aci h adí [illegible].
5. [illegible] e [illegible] ad [illegible] a [illegible] e a a [illegible] e a [illegible] d i [illegible] - d [illegible] e [illegible] a ie [illegible] je ce i [illegible] aci [illegible].
6. P a k h adí [illegible] h [illegible] a [illegible] ia [illegible] ad ih [illegible] e [illegible] a k [illegible] ad a [illegible] ac b d, k [illegible] a [illegible] a iade ie.
7. [illegible] i [illegible] aci [illegible] a [illegible] e k [illegible] a [illegible] e - [illegible] e [illegible].
8. Na k ade iace ch [illegible] ac ch c k [illegible] k [illegible] je [illegible] e [illegible] d [illegible] e, a [illegible] a [illegible] a [illegible] b.

Automatická prevádzka

A [illegible] a ick [illegible] e d ka je [illegible] e- d k a iade a. Na [illegible] a [illegible] k - k [illegible] a ie [illegible] d [illegible] h a [illegible] a ika. P [illegible] ed c [illegible] i [illegible] eg [illegible] a h h adí [illegible] h [illegible] a ia a e [illegible] ad [illegible] d [illegible] edaj c [illegible] a k a [illegible] i [illegible] d [illegible] i a [illegible] a a [illegible] a. P e d - ka e [illegible] ad a [illegible] i c [illegible] i 300 [illegible] a e [illegible] a [illegible] e d k) je i dik a [illegible] e e [illegible] e [illegible] e [illegible] di d [illegible].

POZOR! P i [illegible] e [illegible] k ch [illegible] k ch [illegible] ch (a [illegible]. [illegible] a ie ba a) je [illegible] - [illegible] eb [illegible] a [illegible] k a [illegible] [illegible] ia , ab [illegible] e [illegible] acie a iade ie aj a [illegible] a ej [illegible] ac - a [illegible] [illegible] ej [illegible] acej [illegible] e d ke (iad [illegible] a ch d, i ak [illegible] ik [illegible] ebe [illegible] e e [illegible] [illegible] e- h ia ia [illegible] a e [illegible] ad a).

Ručná prevádzka

K k [illegible] a e [illegible] e d [illegible] h [illegible] e. - e [illegible] ad [illegible] e a [illegible] ac je [illegible] a ej [illegible] e d ke [illegible] e i e d h adí [illegible] d [illegible] ad ej [illegible] d. Od e - [illegible] ie b [illegible] e [illegible] a b [illegible] a ce i - [illegible] aci [illegible].

Zastavenie

K k [illegible] a e [illegible] e d [illegible] h 0., e -

Vh d [illegible] j , a [illegible] k e , a d e a e [illegible] a ed i e [illegible] a e [illegible] k . Re [illegible] a ad 0,2 a ed k a [illegible]

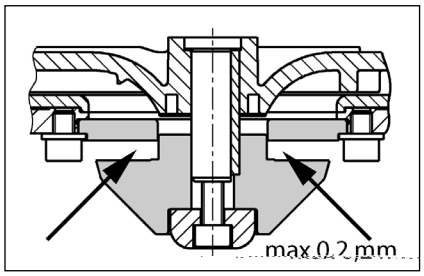

Nastavenie reznej vôle

(P a e e ad e k e).

1. Re ab k je k k d e a a k k je ce k k [illegible] e h a .

2. Z e a k, e a c- a k k a a a e a k a e .

3. Re ab k je a h e e iah je k k [illegible] e h a (ah ac e 8 N).

4. Sk je ahk ch d e h a- a a e e a e aje e a 0,2).

Ak je e a e e i k a d i la ia c a k ka. M ia a ak a k k 1 4.

MALÁ POMOC PRI PORUCHÁCH

Zariadenie sa nerozbehne

Sk je ie a ie, i k a d ch i. Ch b i k a- h a e i ka i ak i e i - i h d i. P i ak a i e e i aje db h e ek ik a a eb d ka ck e i.
Je ch b i e k e e i ka 2 A a e iadiaci a f - 230/12V, ch a a a 230 V de ieda h d . Ch b i ka a ie ah adi e ak a h d .
P k de ie d ede ie, - e ie k a e bca
B k a a k a ie = a e a k, e i iaci k a d- e b k a ie.

Zariadenie sa nerozbehne, hlásenie poplachu

Te a i a d ji a ia- de ie, e je b k a e ad = a- e a k , d je d , iah je ie k, d je ad a ec e ad a a d e b k a- ie.

Znížený čerpací výkon

P a a i a ede ie je e e
U cha a ede ie = e ch je a ede ie
U cha e k a ka = a e - a l c 300 d je a ede ie) a i je e k a k
U cha e a ie e ad a = i je e e- aci hadic e ad - d a k j- e .

Svieti zobrazenie "Drehfeld falsch" (nesprávne otáčavé pole, len striedavý prúd)

Ne ed ie ch f a eb ch ba f a, e a a eb ch baj ci k e ad a = a a ie ej e jk d- b e ek ik .

Svieti zobrazenie "Störung Pumpe (porucha čerpadla, nie compli 300)

Na ch a e ad a je i ch a- a i a e e de, k e ad e i a eb e ek- ickej ch be a. Te a - e ab a e ad e jeh a eag a ied d e d k. Iba e ek ik e e iadiac jed- k e e a a ..

Svieti zobrazenie "Hochwasser" (vysoký stav vody, nie compli 300)

S a d d i je i k e ed a h e a ia a eb a e - h e k = d e ad e a eb a e ede e k.

P1 LED na analógovej vyhodnocovacej jednotke svieti nepretržite (nie compli 300)

P e a cha h adi = a- aje ka ck e i
V d a e ach d a iad a k a = d ej e ch d .
I f cia: K ke ie e ie e e a- ie je ch f kcia.

Čerpadlo „chlípe“ a nevypne sa (nie compli 300)

V ac b d a iade ia a ach d a i k =

e i e i acie k k h adi ed a be ej d i. O e e a d a a a e ac b d a a i k ie. Sk k e e iah je. D iah ie e acej h adi a i d e a b a ha P2 LED.

POZOR! P ad e a e a a a- a i aj a acia h adi a i N a- e ie a acej h adi).

BIZTONSÁGI UTASÍTÁSOK

VIGYÁZAT!

A személyzet szakképesítése

Biztonságtudatos munkavégzés

Biztonsági utasítások az üzemeltető/kezelő számára

Biztonsági utasítások szereléshez, ellenőrzéshez és karbantartáshoz

Engedély nélküli változtatások és pótalkatrész gyártás

Nem engedélyezett üzemmódok

Balesetmegelőzési utasítások

ALKALMAZÁS

A c a ak a a k c i fek iaki- ő k LGA e í i g i e e e de ke ek a ka a ák a e ekő. kb a e , a í a k e eg eke a a a h a i e i ek ki e e.

A ő k e a ha k a 2 H2O ga gbá egfe jebb 7 a id a a- ig.

A e e a ha , de IP 44 e í i de e de ke ik fe f cc e e .

A e k ak egfe e e e e- de e e ha a e e a e egfe e a 2014/30/EU EMC i e de- i e ai ak a ka a h a bá ha a a a i e h a a c a ha a . Eg a i be aj a aga fe gi a f a a e de ke a i h a a c a ak- a e e e e ege e fe a a k a ke a i.

A be e de ha a a a e i í e e ek, e k, a a- í a he i ha a k be a a k e e . I e ek d :

- S e e be e de ek e ek e ek e e e e. E ba a EN 12050 a 12056 ab k)
- Ki fe g be e de ek fe a . N e gbá a VDE 0100)
- Bi g a kae k k . N e- gbá a Be SichV a BGR 500)
- S e ech ikai be e de ek bi - ga . N e gbá a GUV-V C5, GUV-R 104, GUV-R 126)
- E ek a be e de ek e i e- k k . N e gbá a GUV-V A3)
- R bbá de EN 60079-0, EN 60079-1, EN 60079-14, EN 60079-17 EN 1127-1

A kiszállítás tartalma

- T a a kka) - bi í c a be e e he .
- Red k e DN 150 / DN 100 a c i 500 1000 a
- Fe h ha c k a e he (a c i 1200 e e e a ik c a ak- k bi í c ekke)
- C a ak ka a a a e e khe
- E a ik c a ak bi í c ekke a - e e khe
- D g (ek) a k i be b - h , ag a bbi DN 50 be e e ek- he
- R g a ag a kh
- Vi ac e a a e e khe (c i 300, 500, 1000 1200)
- Ve (c i 300 e e)

Üzemmód: S3 aka a e e, d a ţ . ada ka

BEÉPÍTÉS

A e be e de bi fe haj a abad a ke be e i. Mi de ke e- e d. ka ba a a d a ka e e fe e ega bb 60 e , i e aga - ka e e e ke abad hag i.

S e : A e e e k a e ke- e ke e e e i.

B e e e: A bi e e e eg e - f a ke be e e i.

N e e e k: A e e e kbe a i - ac e e g bbi e f - a ke e he e i. Ha a ki a a a a i ac e e, akk e e a he e eg EN ab e í i i af - g ke be e i.

A e e e e h kba ke e e e e ie a he i eg egha i a d i í fe e.

A fe i he e e e he a a e e d. fe .

FIGYELEM! Mi de c a a e a a- ka ei ek g g g ja, a i- a 6 N f ga e a kka ha .

A tároló összeszerelése

A be e e be f a (a k) ja e a ak e ke e dek be , h g a e- e e a a f j a e d e be.

compli 300. A k DN100 be e e e- da , ag fe . i a fe eg 102 kţ e, ag ţ e. A e e e eke c i ja e. R g e a e e ke bi í c e a ha g e e c a a k e- g g e a a be e e e.

C a a a a be e de e g he ha a d ke g e a h a ajd ja a be e de a g ke g e e k ig a be e e e i c e.

Raj ja fe e a je eke a a a a g eckei a. F ja fe a kaka he e e be a eckeke e.

Raj ja fe e a je eke a a a a g eckei a. F ja fe a kaka he e e be a eckeke e.

Minden más compli esetén T ja fe a e be e de a bi í cc e k iga be e e i c e iga a ki a be e de .

A e ibe DN 150 da be e e ha - ak, g e eg 152 ţ kţ ha a a i a fe a je c i ja e a de ţ a ka. Z ja e e a a da d be e e e a e- e e (a k) ha a a a be jb a beka c i e.

Felhívás: A c i 500 1000 e e a DN 150 be e e DN 100- a c kke e e, ha a e ke ed k e e e a bi- í c be ke fe ha a.

H a eg a a a bi í c e ha g e e c a a ka.

Raj ja fe a a a a ak g - he k ge kaka f ja fe a ka.

He e e be a a fac a a a e- e e a ecekke eg a f a ba.

FIGYELEM! A c a a ka c ak a i a - a h a , h g a e def - dj , e e ke e e be fe a e e, h g a e e e if g.

A c i 1200 e k kh a be- e de ke e e a bbi k da- ke g e e g e d. .

A szellőző összeszerelése

R g e a j bb da fe a fe h ha c kka e de ke DN 70 e e e e- ke e e e a a fed e .

A c i 1200 e e gja e a j bb fe 78 -e c c k a je . A g ke e ke e e eke c i ja e. C a a- k a a e a e a ik DN 70 c a a- k a e de ke e e e ke e- e e a ka a fed e .

A nyomóvezeték összeszerelése

A k e e i ka a e e e d. :

1. Vi ac e e (ha a ki a a- a a)
2. Le f a (a k)
3. C a ak ka a
4. N e e e kc a ak a a a e a- ik c a ak a e e e a eg h kba a he i eg egha i a- d i í fe e

A DN 50 függőleges csatlakozó a vészhelyzeti elvezetéshez

E a c a ak k i e b i a ha - a h ha a d .

N i a fe eg kţ e a c c k a je

He e e fe a 58/50-e d g .

A 50 k e e de ke be- e c e a ja a d g a ba. A a j a g 50 ke eg e.

R g e a k i e b i a f - he e a fa a, k e e a be c e, ajd c a ak a a a k i e b i a e e k. A e e e ke i h - kba ke e e e i a he i eg egha i - i a d i í fe e.

A DN 50 vízszintes kiegészítő bemenet

A bbi be e e he a e e e k e e c a a i a fe eg kk ţ e. A ke- e ke e e eke c i ja e.

He e e fe a 58/50-e d g

A 50 k e e de ke be- e c e a ja a d g a ba.

FIGYELEM! A c i 300 a da be- e e ei c a ak a e e keke a

be e de k e be eg . a e
ke e i. E a ega bb 180 aga -
gga ke e de ke e a c a a a a a
fe i fe e k . A c a ak a e e-
k g e a b k ad dha ak
a k e e , d ke e ke he . E e
d e ke e dek be a be e e
e e ke a aga j g e e e i
ke . A e e e k c a ak a ha a -
e he .

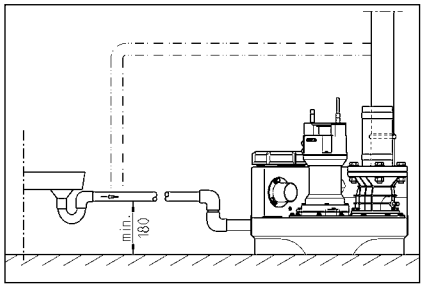

ELEKTROMOS CSATLAKOZTATÁS

A , a k ek , ag a
e ki ag e ek ech ikai
ak be ge he k a -
ka .

Mi de k a k egke -
d e h a ki a be e de
c a ak j a h a b bi -
a, h g a ek a he-
e he fe g a .

FIGYELEM! A h a i c a ak ha e
he e e be! A e e ege e be
a a kh k kh e e he .

A í de k e ka . EN), a
g ecifik ka . VDE), a a-
í a he i e h a e e j ek
e ai be ke a a i.

g e je a i fe g be a a
(d a b)!

A be e de ek í ka c a e de ke -
ek e ek a a a f gg e
be-, i . eka c j K. A be e ia -
a je i, ha a k d be a a e
fe Akk i , ha a c ak e e i.

Ha a a g a fe he , a eke c-
e e eka c ja a . A a a
k ak e h a e h a ki a h a i
c a ak i e a a a eh a
a a ik a beka c . K e e a a -
je a e d e ad.

Berendezések váltóárammal

A be e de c ak e e e e e
k ek h c a ak a ha ja e ek -
a , a i a d i fe e a ha -
ak, 16 A (ehe e e gge) bi ak.

Berendezések váltakozó árammal

A e be e de e ek c a ak -
a h e e i e e e 5
CEE k ek ha ha e ek a-

, a i a d i fe e a ha ak
(3/N/PE 230/400V).

FIGYELEM! A be e de e bi a
ehe e e g bi k k, ag C-ka ak-
e i ik a e de ke a a k /MCI76 28869 29/S a /La g (h)/MCID 9576 BDC BT /T1_1 1 T

Belső riasztójelző leállítása

C[illegible]i 300 e[illegible] . H[illegible] a e a[illegible]ec[illegible]e e[illegible] j[illegible] [illegible] (BRX/BRX1). H[illegible] g a c a[illegible] ak[illegible] e e e[illegible] e, he e e fe a j[illegible] [illegible] eg k[illegible] [illegible] ka[illegible] c[illegible] eg ik ka[illegible] a.

Külső riasztójelző (tartozék)

N i a fe a e [illegible] egfig[illegible] e e aj-[illegible].

A "S+" "S-" ka[illegible] k a[illegible] bbi k[illegible] ak[illegible]ik 12 VDC je ad[illegible] C a[illegible] ak[illegible] a[illegible] ha[illegible] a[illegible] [illegible] 30[illegible] A[illegible] fe[illegible] e e. A be[illegible] ia[illegible] je[illegible] ig[illegible] e i[illegible] ka[illegible] ha[illegible] ja ki, ag be.

A c[illegible] i 300 e e[illegible] a[illegible] kk[illegible] fe e e-he[illegible] eg h a[illegible] gge[illegible] e[illegible] ia[illegible]. A fe e-e i[illegible] a a[illegible] a[illegible] eg[illegible] a ha[illegible] a[illegible].

Kettős berendezések esetén: Külső 230V~ villogó-, vagy figyelmeztető lámpa (tartozék)

C a[illegible] ak[illegible] a k a 230V[illegible] [illegible] a 1A) a N 41 ka[illegible] k a.

He e e[illegible] e i[illegible] d[illegible] [illegible]hida[illegible] a U[illegible] ka[illegible] c a 40-e[illegible] ka[illegible] c a. A[illegible] k[illegible] a F1 bi[illegible] [illegible]ja.

A BRX2 c a[illegible] ak[illegible] h d[illegible] ak a a[illegible] bbiak e-[illegible] ke be[illegible] a[illegible] i:
Vi[illegible] g[illegible] a[illegible] k[illegible] BRX2 (F[illegible] a[illegible] ===)
Fig e[illegible] e[illegible] [illegible] a BRX2
(Vi[illegible] g[illegible] a[illegible] _ _ _).

ÜZEM

Próbamenet és a működés ellenőrzése

1. N i a fe a[illegible] [illegible] [illegible] i[illegible] fede e[illegible].
2. N i a fe a b[illegible] e[illegible] i- [illegible] e e[illegible] k- [illegible] f a[illegible].
3. He e e a be e[illegible] de[illegible] fe[illegible] g a, [illegible] g e je[illegible] a f g i[illegible] e[illegible] i[illegible] ak kije[illegible] e.
4. T[illegible] e fe a[illegible] a beka[illegible] i i[illegible]ig.
5. A[illegible] a ekk[illegible] beka[illegible] [illegible] i a[illegible] -[illegible]. K e e fig e[illegible] e a[illegible] e e-[illegible] a[illegible] i[illegible].
6. A[illegible] i[illegible]ka[illegible] [illegible] j[illegible] e je k e a a[illegible] a beka[illegible] i[illegible] f , a ia[illegible] ki[illegible] d ig.
7. Z[illegible] ja[illegible] e i[illegible] a[illegible] i[illegible] [illegible] a fe[illegible] e [illegible] a[illegible] e.
8. A ka[illegible] [illegible] bb i i[illegible] [illegible] e e e-[illegible] i e a[illegible] , a a[illegible] a[illegible] k a c[illegible] e-[illegible] kek[illegible] ige[illegible]e [illegible].

Automatikus üzem

A be e[illegible] de[illegible] [illegible] e a[illegible] a[illegible] [illegible]. Ehhe a ka[illegible] [illegible] b[illegible] a a[illegible] a[illegible]ik[illegible] he e[illegible]be ke[illegible] a[illegible] ia. A i[illegible]eg[illegible] i[illegible]ka[illegible] c[illegible] a a[illegible] a a[illegible] ba[illegible] f a-d k[illegible] ek[illegible] egfe[illegible] e[illegible] ka[illegible] be ki. A [illegible] a[illegible] [illegible] (c[illegible] i 300[illegible] i k e[illegible] e e[illegible]) a d i g[illegible] di da je i.

FIGYELEM! K[illegible] ege e[illegible] ag bef[illegible] i [illegible] e[illegible] i gek e e[illegible] [illegible] ede c k[illegible]e-[illegible] ek[illegible]) a b[illegible] e[illegible] i f a[illegible] addig ke f[illegible] a[illegible] i, h[illegible] g a [illegible] e[illegible] e ke e[illegible] bb a i [illegible] ka[illegible] i[illegible] [illegible] be[illegible] t k[illegible] dj[illegible] ([illegible] e f [illegible] a[illegible] e[illegible] e[illegible] be[illegible], k[illegible] be[illegible] a[illegible] [illegible]a-[illegible] he[illegible] he[illegible]).

Kézi üzem

Ka[illegible] ja a ka[illegible] [illegible] g[illegible] b[illegible] k i[illegible] ba. A[illegible] a ekk[illegible] a e[illegible] i[illegible] [illegible] gge[illegible] e-

A be [illegible] i [illegible] e [illegible] i g 380 [illegible] a UC 08/2 M [illegible] 25/2 M M [illegible] iC [illegible] k e e [illegible] 1000 [illegible] a 25/2 BW [illegible] 35/2 BW M [illegible] iF ee [illegible] k e e [illegible].

A [illegible] ajka [illegible] c ak a [illegible] egad [illegible] a [illegible] e [illegible] i- gge [illegible] he i fe. A [illegible] ajka [illegible] a [illegible] e a [illegible] a [illegible] k [illegible] e e e [illegible] k ha ja.

A vágórés ellenőrzése

(C ak g ke eke [illegible] k e e [illegible] - [illegible] e). E e [illegible] i e a [illegible] a f g a a [illegible] ak c a a jai, a [illegible] í a e e [illegible] he ha [illegible] ek [illegible] g c a a k [illegible] g [illegible]. S k g e e [illegible] a c a a ka [illegible].

Ha c kke a [illegible] i e je [illegible], ek- ik a [illegible] i ajkib c [illegible], ag c kke a g e je [illegible] e (a [illegible] a b kk a a), eg [illegible] ak be e e [illegible] i e a f g ke k a g eg g k [illegible]. S k g e e [illegible] c e - je e eke a a ka [illegible] eke.

Eg a ka a e [illegible] a, [illegible] eg h ag- [illegible] eg g e [illegible] he [illegible] a g [illegible] g [illegible] e k [illegible] i g . A 0,2 [illegible] - [illegible] ag bb g [illegible] c kke e i ke .

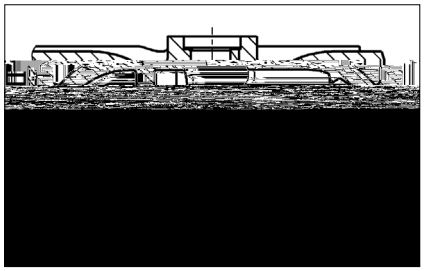

A vágórés beállítása

(C ak g ke eke [illegible] k a [illegible] a k ik).

1. B kk ja a g [illegible] eg fada abba

202.1039 539.992 ga T a ki 30(ga)5(a ki2EMC03k 4EMC a/S eg RDek0021 BDC BT /T1_1 1 Tf 0.168 T 8 3 0 8 49.6063 530.3921 T (083)15( )30(ga)5(a ki0MCID 0

INSTRUCȚIUNI DE SIGURANȚĂ

ATENȚIE!

Calificarea personalului

Lucrări orientate pe siguranță

Instrucțiuni de siguranță pentru operator/utilizator

Instrucțiuni de siguranță pentru lucrări de montaj, inspecție și întreținere

Reconstruirea arbitrară și producția de piese de schimb

Moduri de funcționare nepermise

Indicații pentru prevenirea accidentelor

UTILIZARE

Sș ș ii de ș a e a e a e ș e c a e ii fe-
ca e fi abi e c a i de c c-
i LGA i a de c a e e a ea
a e a e di a e e i a e, ec a
i a a e a de a e a e ajeec a i e
afe e e.

Re e a e e e a ec e a de 2 i d a de ce
a 7 i e.

Si a de c a d e e e a , da e e
eja a i a a i iic a c f a IP
44.

ca i a ii eg a e a e i ii ii
c e e a e, i a de c a d -
de i e e ce i e e de e ç ie a e di ec i-
ei EMC 2014/30/EU i e e a de c a e
i i a ea a c a i ș a e ea a e b iș
de a e a e c e e gie e ec iș ca
ac d ii a e ea i d a i a a ei c a -
e a i i d a i a e c a e a e c e e gie
e ec iș de a e i a f a a de
a e i e, e b ie e ia c a c
a a i e ic c a a e e i e a i e fe-
e e.

ca a i i i a a i , e b ie e e ec-
a e e gi e, e e c i i e e e ec i e a i a e,
e ec a i e e ede i e c a e, ca de e

- ș a ii de e a e a e a e a e e
d e a e a c di i i e e i (de e
E e a EN 12050 i 12056)
- M a e a i a a ii de j a e e i e
(de e Ge a a ia VDE 0100)
- Sig a a i a ij ace de c (de e
Ge a a ia Be SichV i BGR 500)
- Sig a a i a a ii e e h ice e e
a e a e (de e Ge a a ia GUV-V C5,
GUV-R 104, GUV-R 126)
- I a a ii e ec ice i c a abi e (de e
Ge a a ia GUV-V A3)
- P e ç ia a i a e e iei
EN 60079-0, EN 60079-1, EN 60079-14,
EN 60079-17 i EN 1127-1

Setul de livrare

- Re e a e c a e (e) i fa a de fi a e
e e a d a i ie
- Pie e de ed ç ie DN 150 / DN 100 e e
c a i 500 i 1000
- M f ibe e e e e a e a bi i
e a ice c a i 1200 c c ie e)
- Fa a de ac da e e e c d c a de
e e i e
- a bi a e e a i ș c c ie e e e c -
d c a de e e i e
- Ga i i de i e d ce e e e e
a a e c a a b a a e a a d a i ie
DN 50
- Ma e ia de fi a e e e e e
- Ca e de e i e e e e c d c a de
e e i e (c a i 300, 500, 1000 i 1200)
- Si a de c a d (c a i 300)

Mod de funcționare: F ç i a e i e a i-
e S3, e i Da e e h .

MONTAREA

Sș a ia de e a e a e eb ie a d
ig e i i d idica ea i e abi . L g i
a fa a e e e ca e eb ie a i a e i -
e e i e e eb ie e e e e i de c
de ce e i 60 a e, e e ec i e.

Ve i a e: C d c a de e i a e eb ie de-
e a a e e ac e e i .

A a i ie: a a i a di fa a e e i e b-
b ie a e a a e e a a a da .

C d c de e e i e: e a e e ca e e i de
e i e e c d c a de e e i e eb ie a e-
a a e a e a a a da ca
ca e c a e a de e i e e e e e i c
e de i a e a i a a iei, e eb ie a
aici di i i de ig a c a ac ge ii
e i e e a EN.

C d c a de e e i e eb ie de e a a c
b c e e e a ca de e e i e i e .

Pe e d e a ea e a i i de a a b a e, e-
b ie e e e a a a e ei.

ATENȚIE! T a e b ie, ca e e e c a
fi a ea e e i di id a e di e e , a
ie fie e e c a a e a a de
e ge e de 6 N .

Montajul rezervorului

chide i a a di a a i ie (acce i), e -
e a a i edica i a ea a e i a e a -
aj i.

compli 300. De chide i a a i ia d i DN
100, a e a a de c fe c a
de a ece 102 a fe a e eca ic i
deba a i. Fi a i fa a afe e de fi a e
a d eje a a a i ie c aj b i
he ag a e.

b a i c e e a c a ea i a a i-
ei a e e i a i a e ge i i a a i a c
fa a de fi a e, e a a i i a c
a a i a e fi a c a a c aj
b i e e a a i aibe .

Toate celelalte compli a e ge i a i a de
e a e c fa a de fi a e e e a a de ad-
a i ie e a i i a i a i i a i.

Dac e b ie i i a a a i ie DN 150,
a ci ace a a e b ie a ai i de chi a
a a aj c a a b a a a a a i ie
DN 50
Ma e ia de fi a e e e e e
Ca e de e i e e e e c d c a de
e e i e (c a i 300, 500, 1000 i 1200)
Si a de c a d (c a i 300)

Mod de funcționare: F ç i a e i e a i-
e S3, e i Da e e h .

I d ce i b e e a e e
c aiba i dib i a e aj e e i i
ba i fe .

ATENȚIE! S ge i b ie a fe ,
a fe c e e e e def a e e,
ca c a e a e e ic ei ee a -
ei i.

La i a a i ie e iei de c ç ie c a i
1200, e e e fi a a e a c
ș d c a i a e a e.

Montajul ventilării

Rac da i c d c a de e i a e c a fa i-
be DN 70 d ea a a e e i a ece i-
e e a e ac e e i .

La c a i 1200, i a i d e a e i
78 a a a a aj i deba a i. Rac da i
ac a c d c a de e i a e c a bi a ea
e a i ș DN 70 i a ece i- e e a e ac e e i .

Montajul conducteei de presiune

M a ea e e fa a de e e ac a e:
1. C a e de e i e e (daș e e i c
e de i a e)
2. Ve i de chide e (acce i)
3. Fa de ac da e i
4. ac da i c d c a de e e i e c a bi-
a e e a i ș i de e a a i- c b c e e e
a ca de e e i e i e .

Racord DN 50 vertical pentru evacuarea de urgență a apelor uzate

Ace ac d e e i i a e e a ac da ea
ei i e e a a e c a a b a .

De chide i a a a i a c a j c fe c
a de a ece i deba a i- .

I d ce i ga i a de i d ce e 58/50.

a i ge i ea a de a a i ie - c di a e e
e i 50 a - i ga i a de i d ce e
e e . Di a a fa a de f d e e -
i e b ie e e a e 50 a .

Fi a i i a a a a a c a a b a a e-
e e, a fe c e fie bi e acce ibi , c -
ec a i- c ea a i d i a i a i ac da i
c d c a de e e i e a i a e i a a c
a a b a . Ți i aici, c d c a de e e i e e-
b ie de e a a c b c e e e a ca
de e e i e i e .

Admisie suplimentară DN 50 orizontală

De chide i ca e a e e fab ica a e e ad-
a i ia i e e a a c fe ci c a a i
deba a i.

I d ce i ga i a de i d ce e 58/50.

a i ge i ea a de a a i ie - c di a e e
e i 50 a - i ga i a de i d ce e
e e .

ATENȚIE! C d c e e de ac da e de a ad-
a i i i e j a e a e a e a e c a i 300 e b ie
e e e e c e i b i a e a e de i a a i e
c a a a i c de ac a a e. Ace c
e b ie i aib ce i i e de 180
a a e e a e a i fe i a a e i i i a de
i a a e. Da i b e de ae di c d c-

[illegible]

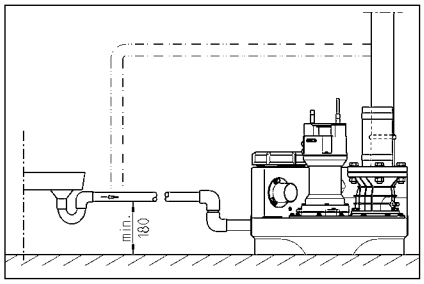

CONEXIUNE ELECTRICĂ

[illegible]

[illegible]

ATENȚIE! [illegible]

[illegible]

[illegible]

[illegible]

ATENȚIE! [illegible]

Montarea sistemului de comandă (în afară de compli 300)

[illegible]

Nivele de conectare

[illegible]

Restabilirea nivelului de pornire (în afară de compli 300)

[illegible]

Instalații în curentul alternativ

[illegible]

Instalații în curent trifazat

[illegible]

Instalație de alarmă

[illegible]

Acumulator pentru instalația de alarmă (în afară de compli 300)

[illegible]

Contorul orelor de funcționare

[illegible]

Oprirea buzerului intern

[illegible]

Buzer extern (accesoriu)

De chidș i a a e e a i ș i de c a d .

La b e e "S+" i "S-" e a e c ec a ș ac ic de ș a e, e a, e a de 12 VDC c c ș de c e de a 30 A. B e i e a e fi i a a ege e.

La c i 300, a e fi a a de- e de de ș ea ca acce i , c de ș aj e i a e e .

La instalațiile duble: Bliț sau lumină de avertizare extern(ă) de 230 V~ (accesoriu)

C ec ș a i ș i a 230Vș a 1A) a b a N i 41.

A e ș a i a ea c ș i a de a b a Uș a 40. Ci i de c e e a ig a i F1.

Reg ș i J ș e BRX2, a fe :
B ș e k BRX2 e ș a e ===)
L ș i de a e i a e a BRX2
(i e ș i e _ _ _).

FUNCȚIONAREA

Funcționare de probă și verificarea funcționării

1. De chidș i ca ac de c a e de a e- e .
2. De chidș i a a di c d ș a de a ș i ie i de e i e.
3. P e i i a a ș ia b e i e, e ec ș a i i dica di e ș ieic ș i .
4. U e ș i e e e a i e de - i e.
5. P ș e a e e ac ș i g e e e e- . M i ș i a i e ce de ș e a e e i ifici de c a e.
6. Ridicș i f c i de i e ce c ș a e e e c de i e, e c d i a a ș ia de a a ș dec a ea .
7. _ chidș i di i ifici de c a e c ca ac ș i ga i a.
8. P i ș ai a e cic i de c ec ș a e, e i- ificș i e a ei a ea e e i, fi i g ie i b a a.

Mod automat

M d a ș a e e f ç i a ea ș a a i a a a i ș a a a iei. Pe a ș ea a, c ș a ș ba - c a a eb ie ad e i ș ia "A a ș a". P i c de i e i ș ega a, e ș a e e c - ec ș a ș i de c ec ș a ș c f ș i e i de i chid di e e . F ç i a ea e ș e i (a c ș e i 300 - a ea e ș eg i ș de f ç i a e) e e i dica ș e i - di d ș i a ș e de.

ATENȚIE! ca ca i ș i de a ș i ie e ș ce e i a de a a i (de e d a ea i ci ei), a a di a ș i ie eb ie e a ș , a fe - c a a ș ia de e ș a e c ea ș c a e a d a de c ș a e(e i ș f c- i a e c a ș , ci e ic de e a ș i e a ș i e ș ei).

Mod manual

Ad ș e i c ș a ș ba c a a e i ș ia "Ma a". P ș a f ç i ea ș ac ș i de- e de de i e de a e a e ș d de f ç i a e c a ș . E ac a ea a e i e ș a e eb ie ș i a ș de aceea e i ifici de c a e.

Oprirea

Ad ș e i c ș a ș ba c a a e i ș ia "0", e ș a e e ac ș e i ș . I a a ș ia de a a - ș e e di a a de f ç i a e.

Pe c ș i de a a a ș ie i de e ș i e e a i ș de c ș a d a a e ș , a i a i ș i ș ia "0", ci c a ș e i a ș dea a a e ș di e i- ș .

Inspecția

Pe ș e i e a ig a i f ç i a e, eb ie e ș e c a i a i a a- i ei i c i a b a ii.

ÎNTREȚINEREA

V ec a d e ac a ea e ș i e ii c - f ș EN 12056-4.

Pe a ga a a ig a ș c a i ș f ç i a e a i a a ș iei d ș ea a a ș , ș ec a d ș cheie ea i c a ac de e ș i e e.

_ e ș i e ea a ș iei de e ș a e a e a e ș ș ec ș a e ii feca e i ș ie e ș e ș e a ș eb ie ea i- a e de e e ș i a i a e a e de 3 i c ș - a ș ii c ș e cia e, de 6 i c a e c ș ai ș e fa iii a a 12 i c a e c i - g ș fa i ie.

_ ai a e de feca e c a e, c a ș i a ș i a a a ș iei di e i ș , a fe c a i a a ș ia ș e a ș fi e ș di b a e i e de a a e e a e.

Ve ifica i de e i a ea ș eca i ș i ch i ș a a ș i i a c d a ei f e ibie di ca ci c. C d a e e de a i a e a d i a eb ie c i a e.

_ ș e ș i e ii, ș ec a d ș e ac - a ea ș a e c ș i:

1. Ve ifica i e a i a a ea c i de eg a - ș e i ce ce a ea ei c j a e a i a a ș ii i fi i g i .
2. Aș i a ea a ei; Ve ifica ea acce ibi i- ș ii a e, eg a ea i b ifie ea, daș e a ca .
3. De chide ea i c ș a ea di e i a i de ig a ș c a c ge i i e i e ; C ca i ib ei (ca e ș).
4. C ș a ea e ș ei ia ei c d a ei di- ec ș ac da e; Ve ifica ea i i a- g i.

R a ii a i a ea ș chii a - c ș i e.

5. C ei i, c ș e a ea - a e - ie - a ch ș ba ea ei i (daș e i ș ca e ș de ei).
6. C ș a e i e ș a e e i (a e ie, e ec i c f ș ce i e e ecia e) de e de a ea ii.
7. Ve ifica ea ș ii e e i de c ec a- e.
8. S ș a ea c ș e ș a i a a ș ieic a ș a fieca e 2 a i.
9. Ve ifica ea i ș i e ec ic a i a- a ș iei. Si ș de c ș a d i ece i ș e ș i e e, a i eb ie ș fie i eg a ș ac ș a , ia ace a eb ie c a a ș d eg a i a f c- i a i ș ii. Pe a ș ea a, a ci c d i a a ș ia e i ș e i e, idica ș i f e e , e ș e a de a a ș a de a ș a e e , f a eb ie c - ș a daș e e ece a .

D ș ea i a ea c ș i de e i e e, i a a ș ia eb ie e ș di f ç i e d ș ea i a ea ei f ç i ș i de e ș . T eb ie ș i ș i e ce e ba a e i- e i c e eci a ea a c ș i ea i a- e i a da e e e ș ia e.

Controlul uleiului

(Va abi i ș ai e e i a a ș ii e 08/2, 25/2 i 35/2) Ca e ș a , b ie c ș a g i e i e i ș he g a ș , e e ec i b ie i b eb ie de f c e de j ș e ej e ș ei i e ș a e e c a ș ș e ș c i di e e . O ifici de ș e e i de g i e a ca e ei de ei e e a a ș e e e i e ș i i e ș edi b i i "U ei". Pe c ș ga i ș iii eca ice, ei di ca e a de ei i c i ca a ș ea e i- da ș e e e ac a/ ie e ca a ș/ a - a c a de ș ș .

‹ Daș ei c i e a ș (e), eb ie ș e ea i e e i ch ș b de ei. D ș a e 300 e de f ç i a e, a i ș a d ș 6 i, c a ș a i di ! !

‹ Daș ei c i e a i a ș i ș e i- ș i, afa ș de ei ai eb ie c i ș i ga i a ș eca i ș . Pe ș i a ea ca e ei de ei a e fi a, chia i e- i , e ec d a a a i a de c a a e a ș ii "DKG" c b i "DKG".

Înlocuirea uleiului

(Va abi i ș ai e e i a a ș ii e c ie de e ș e 08/2, 25/2 i 35/2) Pe ș e - i e ea ig a i f ç i a e, e ș ch ș b de ei eb ie ea i a d ș 300 de e de f ç i a e i a ch ș b de ei d ș 1000 e de f ç i a e ca i ș i a i ic de e de f ç i a e, eb - ie ș e ea i e e ș ce e i da ș e a ch ș b de ei.

Daș e a e ș a e a e c ș e i e i e ș e ic ab a i e, ch ș b ie de ei eb - ie e ș e a i e a e c e e ș ș ș ai c e.

Pe ch ș ba ea c i ș ș ș ica e ei de ei, eb ie ș i i a ei ș i e a hid a ic HLP a c a ei de c i a e 22 - 46, de e M bi DTE 22, DTE 24, DTE 25.

Ca[illegible]a de [illegible] e e[illegible] [illegible]a 380 [illegible] a [illegible] e e M [illegible]iC [illegible] UC 08/2 M [illegible] i 25/2 M [illegible] i 1000 [illegible] a [illegible] e e M [illegible]iF ee 25/2 BW [illegible] i 35/2 BW.

C[illegible] e a de ei a e [illegible] ie [illegible] fie [illegible] [illegible] ai c ca[illegible]a de ei[illegible] e[illegible] [illegible]. O [illegible]a-[illegible] e e d ce a di [illegible] ge ea[illegible] [illegible]ei.

Controlul fantei

(Va abi [illegible] ai [illegible] [illegible] [illegible] e c [illegible] [illegible]).
[illegible] b i e ca ca ei [illegible] [illegible]ei, [illegible]ec[illegible] [illegible] i - b i e de e[illegible] [illegible] i de fi[illegible] e a i [illegible]a [illegible] iei [illegible] eb ie c [illegible] [illegible]e da[illegible] [illegible] fi[illegible]e [illegible] [illegible] ie i, a [illegible] ie, [illegible] eb ie [illegible] e.

[illegible] ca [illegible] ei[illegible] e i ed e de[illegible] a [illegible] [illegible], g - [illegible] [illegible] ai[illegible] e [illegible]ice [illegible] f [illegible] [illegible] a e a a [illegible] ei [illegible] e i de[illegible] ie e [illegible] [illegible] de e [illegible] [illegible] di[illegible] a de b [illegible] - ca e a[illegible] [illegible]ei), [illegible] [illegible] [illegible] eca i[illegible] de[illegible] - ie e [illegible] eb ie c [illegible] [illegible]e de [illegible] [illegible]ecia i [illegible] da[illegible] [illegible] [illegible]e i, a [illegible] ie, [illegible] eb ie ch[illegible] ba[illegible]e.

C aj [illegible] [illegible] ei [illegible] e[illegible]e adec[illegible]e, de e [illegible] [illegible] e[illegible] [illegible] a e, [illegible] eb ie[illegible] [illegible]a[illegible] fa [illegible]a di - [illegible] e [illegible] [illegible] de[illegible] ie e i[illegible]aca de[illegible] ie e. O fa[illegible] de[illegible] e 0,2[illegible] [illegible] eb ie ed [illegible].

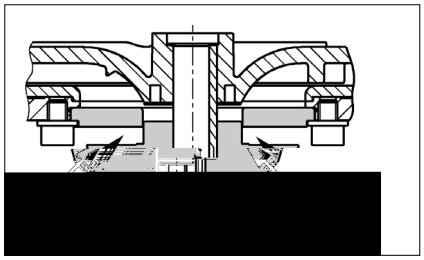

Reglarea fantei

(Va abi [illegible] ai[illegible] [illegible] [illegible] e e c [illegible] [illegible]).

1. B [illegible] ca i [illegible] [illegible] de[illegible] ie e c [illegible] b ca[illegible] de [illegible] [illegible] i de face i [illegible] b ce[illegible] a c [illegible] a gi e i[illegible] e i a[illegible] he [illegible]g [illegible] a[illegible].

2. Sc[illegible] a[illegible] i[illegible]ie a de[illegible] e i [illegible] e, [illegible] [illegible] de[illegible] ie- e i aiba de aj [illegible] a e i, a[illegible] i, ei [illegible] d ce i [illegible]ie a de[illegible] e i [illegible] e i [illegible] de[illegible] ie e.

3. B [illegible] ca i [illegible] [illegible] de[illegible] ie e i [illegible] .770T]TJ [illegible]ET [illegible]EM8 49.606[illegible]256 Te[illegible]/S[illegible]371147 [illegible]La[illegible] g ([illegible])/MCID 11146 c 11138 B[illegible]/S[illegible] [illegible]La[illegible] g ([illegible])/MCI.3 T [illegible] [illegible] i a

购买君格的产品，一流的质量与高端的服务是并存的。

请按照安装手册进行安装，才能确保产品达到让客户满意的工作性能。

因错误安装或误操作所引起的产品损坏会影响质保。

和所有电子设备一样，该产品在断电或者出现故障的情况下将停止工作。

如果可能造成损失，应安装独立的报警系统。

根据不同应用，可安装应急发电机或备用系统。

本使用手册包含安装、操作和维护期间必须遵守的基本信息。在设备安装和投入运行之前安装人员及技术人员/操作人员都必须认真阅读手册，并将其保存在泵或设备安装位置附近以供随手查阅。不遵守安全须知可能导致保修失效。

在本手册中，安全信息由特定的符号明确标识。忽视这些信息可能会导致危险。

一般人身危险

电压警告

注意！对设备和操作人员有危险

所有操作、维修、检查和安装人员都必须具备从事这项工作的相关资质，并通读手册内容以确保充分掌握。人员的监督、能力和职责范围由运营商负责管理。如果任何人不具备必要的技能，则必须向其提供相应的指导和培训。

严格遵守本手册中的安全说明、现行国家事故预防法规以及任何内部作业、操作和安全规章。

/

务必遵守所有法规、本地条例和安全法规。

电力安全隐患要特别小心。

如果存在危险（如爆炸、有毒、灼热）物质泄漏，必须安全地排放，避免危及人身或环境。同时严格遵守相关法规。

作为一项基本原则，只有关闭设备时才能在设备上进行作业。如果在输送有害物质的泵或设备上作业，必须先清洁污染物。

在作业完成后，应必须立即复原所有安全和保护组件和/或将其投入使用。根据现行法规和规定，在重新启动前必须先检查其有效性。

任何改动或更改设备的操作须征得制造商的同意。为确保安全，务必使用制造商认可的 原厂 备件和附件。使用非原装零件可能会导致保修失效。

只有用于正确用途，设备才能安全运行。在任何情况下都不得超过在“ 技术数据 ”章节给出的限值。

在开始维修或维护工作前，封锁作业区并检查起吊工具是否状态良好。

不要单独作业。一定要戴好安全帽、护眼镜和安全靴，必要时系上安全带。

在进行焊接工作或使用电气装置之前，检查有无爆炸危险。

在污水处理系统中作业的人员必须接受抗体接种以免被在系统中出现的病原体感染。出于健康考虑，无论在哪里工作一定要特别注意洁净度。

确保在工作区内无任何有毒气体。

严格遵守职业健康和安全作业法规，确保随身携带一个急救箱。

在某些情况下，泵及其输送介质可能高温灼热而导致烧伤。

当设备位于爆炸性危险区域内时，适用特殊法规！

即接即用型compli污水提升泵站通过LGA认证，适合处理厕所和小便池废水以及含有常见杂质的家庭废水。

该水箱能够浸没在深度不超过2米的水中不超过7天。

控制单元不能浸水，但具有IP44防溅等级。

如果安装合格并使用得当，该控制单元符合EMC指令2014/30/EU的防护要求，适合家用并使用普通电源供电。由于抗干扰性不够，不宜采用企业高压变压器提供的工业电源。

泵的使用必须遵守有关国家法律、法规和规定，例如：

建筑和地面排水系统的排污装置（ 如欧洲EN12050和12056 ）

家庭污水和废水（ 如德国EN12056)

低压系统的安装（ 如德国VDE 0100 ）

安全和加工材料（ 如德国BetrSichV和BGR500 ）

污水处理系统安全（ 如德国GUV-V C5，GUV-R104和GUV-R126 ）

电气系统和操作资源（ 如德国GUV-V A3 ）

防爆标准 EN60079-0, EN60079-1, EN60079-14, EN60079-17和EN 1127-1

水箱，泵及进水口夹紧法兰

缩径接头DN150/ DN 100，用于compli 500和1000

通风管套管（带软管卡箍的compli 1200柔性连接管）

压力排水管连接法兰

压力排水管柔性连接管，带软管卡箍

手动隔膜泵或额外DN50进水口插入式密封件

箱体固定材料压力排水管止回阀(compli 300、500、1000和1200）

控制单元（非compli 300）

工作制：间歇运行S3

泵安装必须保证抗浮力和自由直立。部件周围和上方必须至少有60厘米宽或高的工作区域以方便操作或维护

通风：通风管必须高于房顶。

进水口：在水箱前面的进水口必须安装废水闸阀。

压力排水管：在压力排水管的止回阀之后必须加装一个废水闸阀。如果系统的供货范围内不包括止回阀，则必须安装EN认证的翻板式止回阀。

压力排水管必须在本地背压水位以上设置回型弯。

必须提供泵集水坑以便处理来自泵安装区域的积水。

注意！各个组件和水箱的所有固定螺栓的拧紧扭矩不得超过6 Nm。

关闭进水口（附件）处的闸阀以防止在安装过程中漏水。

compli 300：选择所需的DN100进水口，在侧面或顶部标记处使用102ø孔锯或竖锯切开进水口，然后去除边缘毛刺。使用六角螺钉将附带的夹紧法兰固定到进水口，不要拧紧。

取出设备固定支架并拧到水箱上，然后在安装了夹紧法兰的水箱上推入进水管， 并尽量让进水管深入水罐。

在地板上标记膨胀管的位置，然后钻孔并安装膨胀螺丝。

现在紧固夹紧法兰，然后使用木螺钉和垫片将设备固定到地板上。

所有其他compli型号：必须使进水管从夹紧法兰口尽量深入罐体，然后对齐。

如果使用DN150侧进水口，必须首先在标记位置处使用ø152的孔锯切开进水口，然后去除毛刺。标准进水口必须使用封闭套件（附件）封闭，并复位启动水位。

注：对于compli 500和1000，如果先在夹紧法兰安装附带的缩径接头，进水口管径可从DN150缩小至DN100

拧紧夹紧法兰上的六角螺钉

标记水箱和地板固定孔的位置，然后钻孔。

将木螺钉、垫圈和膨胀管一起插入孔内并拧紧。

注意！确保水箱不会由于螺钉拧得过紧而变形，否则可能会导致泄漏。

compli 1200设备的水箱在两侧使用两个支架加固。

使用DN70套管将通风管连接到水箱右上方，使之高于房顶。

对于compli 1200，在标记处切断右上方 ø78 mm管道并去毛刺。然后使用DN70柔性接头连接通风管，使之高于房顶。

安装以下部件到出口法兰上：

1. 止回阀（不在供货范围内时）

2. 截止阀（附件）

3. 连接法兰

4. 使用柔性接头连接压力排水管并在本地背压水位以上设置回型弯。

DN50

此进水口用于连接手动隔膜泵。

使用孔锯在标记处切开管道连接。然后去除毛刺边缘。

将插入式密封件58/50放入到位。

将外径为50毫米的进水管穿过密封件推入水箱内，到水箱底部的距离至少保持50毫米。

将手动隔膜泵固定在墙上易于检修的位置，并连接到插入式管道上，然后将压力排水管连接到手动隔膜泵。在这里，压力排水管同样必须在本地背压水位以上设置回型弯。

DN50

使用孔锯，沿预切沟槽切开进水口。去除边缘毛刺。

将插入式密封件58/50放入到位。

将外径为50毫米的进水管穿过密封件推入水箱内。

注意！连接设备侧面低水位进水口的管道必须配有一个弯头，尽可能靠近设备。这个弯头的内底到地板的高度至少为180毫米。在连接管内集结的气穴可能导致溢流问题，从而产生背压。为了防止背压，进水管必须在最高点排放空气。为此可将通风管连接到水箱的通风装置。

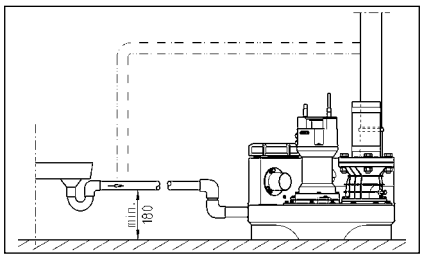

只有有资质的电工才能执行泵或控制装置的电气作业。

开展任何作业之前拔出电源插头，确保他人不会再次接通电源。

注意！切勿把电源插头置入水中！插头进水可能会造成故障和损坏。

必须遵守各种情况（如EN）适用的标准、国家法规（如德国VDE）以及本地电网运营商的规定。

注意工作电压（见铭牌）！

设备带有液位控制器，可根据水位启动和停止泵。一旦发生故障，即使只是暂时性的故障，集成式报警系统就会发出蜂鸣声

如果泵过热，电机绕组内的热敏开关会停止电机运行。在热敏开关切断系统运行后应先拔出电源插头，再排除故障。如果仍然通电，设备可能会自动重新启动。这不会产生直接的故障消息。

AC

泵电源插座必须根据相关法规正确安装在干燥房间内高于背压水位的地方并配备至少16 A（延时型）的保险丝。

污水处理装置的电气连接需要提供一个5孔 CEE电源插座。该插座必须位于干燥房间内，高于背压水位（3/N/PE～230/400 V）。

注意！泵只能使用慢熔断保险丝或C特性自动熔丝。

compli 300

控制单元只能安装在干燥房间内高于背压水位的地方，随时保持外壳封闭。安装位置必须方便检修。高湿度和结露都会损坏控制装置！

工厂针对各型号的标准进水口高度设置了启动点和关闭点。

如果使用不同的进水口高度，就必须重新定义启动点（不适用于compli 300），否则进水口可能会出现背压。

重新设置后控制单元会自动将报警（+2厘米）和（双泵型）峰值负载（+4厘米）的开关点复位。

compli 300

暂时关闭系统，将手动-0-自动开关设为“ 0 ”。通过控制单元右侧的“ 模拟评估器 ”模块调节启动点。暂时取下该模块的透明盖。向集水室注水至进水口开口底部边缘。

在模拟评估器上有三盏指示灯，分别标为P1、P2和P3。应该只有P2亮起。如果P3也亮起，则必须重新调节。

转动P1下面的小调节螺钉，顺时针转动完整的一圈或两圈。然后取浮子开关，将其浸入集水室下关闭点以下，使其再次浮起。如果P3仍亮起，再次顺时针转动调节螺钉一整圈并再次浸没浮子开关。

重复该过程直到P3不再亮灯，然后逆时针往回转动调节螺钉直到P3再次亮起的确切点。至此启动点设置完毕。

故障消息采用声光两种形式发出。标准电源供电报警系统报告泵内电机的故障（红色LED，不适用于AD 00或compli 300），同时内置声音报警响起。该声音只有在排除故障或完全停用装置时才能关闭。

如果安装现场不合适使用声音报警，可以通过电路板上的无源触点（端子40和41）发出报警信号（compli 300的端子在插头内）。集中式报警的无源触点最高容量为5 A/ 250 VAC。该触点在故障排除后重新断开。

compli 300

标准报警装置由电源供电，即断电就无法触发高水位报警。为了确保即使断电也能正常工作，必须使用可充电电池。打开透明盖。将电池组连接至接线夹，并使用原电缆扎带固定到PCB的预定位置（G1）处。在持续报警的情况下，电池组可向报警系统供电约1小时。

在恢复通电后，电池自动重新充电。空电池在充电约24小时后就可以投入使用，约100小时完全充满。

定期检查电池的状态！具体做法是断开设备电源，触发高水位警报。声音信号的音量在数分钟后没有明显降低迹象。电池使用寿命大约为5年。注意电池上的日期，五年后应及时予以更换。

只能使用9V可充电电池！使用干电池有爆炸危险！

控制单元可以安装选配的计时器（不适用于compli 300）。具体做法是剪短计时器的接头到约8毫米，将其插入到电路板BSZ处的4孔插座。如果再次开机后没有计时器显示，那么将计时器旋转180 °。

不适用于compli 300。拆下密封的跳线（BRX/BRX1）。为了避免跳线丢失，将它装到两针连接器的一个针脚上。

打开控制单元上的透明盖。

在端子“ S+ ”和“ S- ”上可以连接一个额定电流不超过30mA、12 VDC的额外声音信号发生器。内部报警蜂鸣器可以独立地打开或关闭。

在compli 300的情况下，可作为附件安装一个独立于主电源供电型报警装置。水箱上有一个专门的安装底座。

230V

连接交流230V的报警灯（电流最大1A）至接线端子N和41.

一个带绝缘的线桥接在端子U~和41之间，电路将受到保险管F1的保护。

跳线BRX2设置：闪烁灯无需BRX2设置（连续===），报警灯应有BRX2位置（闪烁 (_Π_Π_)

1. 打开水箱的维护盖。

2. 打开进水口和压力排水管的截止阀。

3. 将设备接通电源，并观察旋转方向指示。

4. 注满水箱至启动水位。

5. 泵现在启动并抽空水箱。通过维护口观察泵送过程。

6. 用手慢慢抬起液位控制器的浮子，直到高于启动点并保持直到触发报警。

7. 然后使用盖子和密封件封闭维护口。

8. 通过开关运行数次，确保水箱、接头和管道不漏水。

自动运行是装置的正常运行模式。因此摇臂开关必须设为“ 自动 ”模式。泵可通过集成的液位控制器根据水箱水位来启动和关闭。泵运行时绿色LED灯亮起（在compli 300的情况下表示准备好运行）。

注意！如果过量污水流入设备（例如排空泳池时），打小进水口截止阀，直到设备可以再次正常运行，反复启动和关闭（不要连续泵送，否则可能导致泵电动机过热）。

将模式开关设为“ 手动 ”，可使泵长时间运行，不受污水水位影响。因此应通过维护口来观察泵出操作。

将模式开关设为“ 0 ”，可关闭泵，但报警系统仍保持激活状态。

在维修和维护控制装置和泵前，不要简单地将选择开关拨到“ 0 ”位置，而应该拔掉设备电源。

为了保持可靠运行，每月目视检查装置一次，包括管道连接。

我们建议您根据EN12056-4维修设备。

为确保设备长期可靠，建议您签订维修合同。

污水提升装置应由专业人员进行定期检修保养。商业楼宇的维保周期是3个月，公寓楼的维保周期是6个月，独立式住宅是12个月。

在进行任何作业之前都必须先断开泵和控制装置的电源，并采取措施以确保其不再通电。

检查电缆有无机械或化学性损坏。如有破损或扭结，予以更换。

我们建议维护工作应包括以下内容：

1. 检查连接点是否漏水，并检查设备和管件的周边区域。

2. 操作截止阀，检查它们能否轻松移动。必要时予以调节和润滑。

3. 打开并清洁翻板式止回阀；检查阀座和阀球（阀门）。

4. 清洗泵及与箱体连接管道；检查叶轮与轴承。

5. 检查润滑油。必要时加满或更换润滑油（水泵有油腔时）。

6. 清洁水箱内部（必要时或者特别要求时）；例如清除任何油脂。

7. 检查集水箱的状况

8. 每2年用水冲洗系统一次

9. 检查设备的电气部分。控制单元本身是免维护的，但如果配备了可充电电池，则应该定期检查，以确保电池状态良好。具体做法是断开设备的电源，并用手慢慢抬起液位控制器的浮子，然后保持直到触发报警。此外，必要时清洁浮子。

完成所有的维修任务后必须进行试运行，然后将设备重新投入使用。该检修必须记录在案，注明重要数据以及所有维修任务的细节。

（仅适用于08/2、25/2和35/2型号）。首先，拧开泵周围的六角螺栓或内六角螺栓，从水箱上卸下泵和叶轮的组件。油腔堵头标记为“ Ol ”。为了检查机械密封，润滑油及任何残余物必须从油腔中排出，并收集在一个干净的测量容器内。

如果润滑油含水（乳浊液），必须更

换润滑油，并在300个工作小时后再检查一次，而不是在6个月后！

但是，如果油被水和污染物污染，则除了润滑油，还要更换机械密封。

为监测油腔，也可将“ DKG“ 密封螺栓取下，更换为 ” DKG“ 泄漏探测传感器。

仅适用于08/2、25/2和35/2型号）。为保证可靠运行，第一次更换润滑油应在运行300小时后进行，以后每运行1000小时更换一次润滑油。

即使运行时数很少，仍应每年至少更换一次润滑油。

如果泵送极强研磨成分的废水，应相应缩短更换润滑油的时间间隔。

使用HLP液压矿物油，粘度等级22至46，如美孚DTE22、DTE24、DTE25，来更换油腔中的润滑油。

MultiCut系列泵UC08/2M和UC25/2M的润滑油用量为380 cm3，而MultiFree系列泵UC25/2BW和UC35/2BW为1000毫升。

贮油器只能加注一定量的润滑油。过多会导致泵无法运行。

仅适用于带切割系统的泵。必须检查泵壳螺钉以及连接和固定螺钉，以确保其紧固。必要时拧紧。

如果泵性能下降、运行噪音越来越响或切割性能降低（泵易于堵塞），必须联系专业人员检查叶轮和切割系统的磨损情况，必要时予以更换。

使用合适的工具（例如塞尺）测量切割转子和切板之间的切割间隙。切割间隙超过0.2毫米时必须调低。

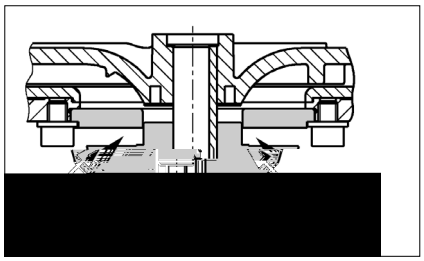

1. 用一块木头阻塞切割转子并拧松中心内六角螺钉。

2. 取下压缩片、切割转子和调节垫片，然后再次装上压缩片和切割转子。

3. 阻塞切割转子，并再次拧紧内六角螺钉（拧紧扭矩8 Nm）。

4. 检查切割转子移动自由度以及切割间隙（不得超过0.2毫米）。

如果切割间隙仍然太大，必须再拆下一个调节垫片。重复步骤1-4。

检查电源电压、保险丝和接地故障断路器。只能使用相同容量的保险丝来更换损坏的保险丝！如果保险丝再次烧断，请联系有资质的电工或我们的售后服务。

230/12V控制变压器的保险管（延迟型）、电机接触器和230V交流电源发生故障。只能使用相同容量的保险丝来更换损坏的保险丝！

如果电源线损坏，只能联系制造商来更换。

如果浮子开关受阻，关闭进水口截止阀，打开维护盖，疏通堵塞。

因为泵堵塞，电机绕组内的热敏开关可能关闭了系统。在这种情况下，关闭进水口截止阀，排空水箱，拔出电源插头，拆下泵组件并疏通堵塞。

检查压力排水管中的截止阀是否完全打开。

如果压力排水管堵塞，用水冲洗压力排水管进行清洁。

如果止回阀阻塞，清空压力排水管并清洁止回阀。

如果通风系统堵塞，清洁引自泵水箱的通风管，检查通风孔。

如果设备在开始泵送时工作正常，但在结束时声音变得非常响，则必须由合格的电工在控制单元重新定义关闭点。

"Drehfeld falsch" ”

电源相序错误或缺相- 因此降低或停止泵输送。电源连接只能由合格的电工进行维修操作。

"Störung Pumpe" ” compli 300

泵通过一个集成的电路断路器进行保护。如果过载或电动马达故障，该断路器会关闭泵。在发生这种情况后，它必须手动复位以便再次运行泵。控制箱要求由合格的电工才能打开控制单元来按下该复位按钮。

"Hochwasser" ” compli 300

泵送流量过低或进水流量过高导致水箱水位过高。清除泵或压力排水管内的任何堵塞物和/或消除过多的流入量。

LED P1 compli 300

综合液位开关故障。请致电我们的售后服务。

水箱内没有剩余的水。加注少量的水。

注意：如果在泵送之后LED灯短暂亮起，这不属于故障信号。

“ ” (compli 300

泵的停止水位太低。

拧下集水箱前面的综合液位开关上的三颗固定螺钉。小心向右旋转到关闭点可设置更高的水位。重新拧紧螺钉。在泵送期间如果LED2熄灭，则说明达到关闭水位。

注意！也可能同时需要重新调节启动水位（请参阅“ 重新定义启动水位 ” 章节）。

注意：如果感到正常呼噜声太大，也可以这种方式将停止水位设到一个更高的水位。）

TECHNISCHE DATEN - TECHNICAL DATA -CARACTÉRISTIQUES TECHNIQUES- TECHNISCHE GEGEVENS - DATI TECNICI - DANE TECHNICZNE - TECHNICKÉ ÚDAJE - TECHNICKÉ ÚDAJE - MŰSZAKI ADATOK -DATE TEHNICE - 技术指标

compli 100

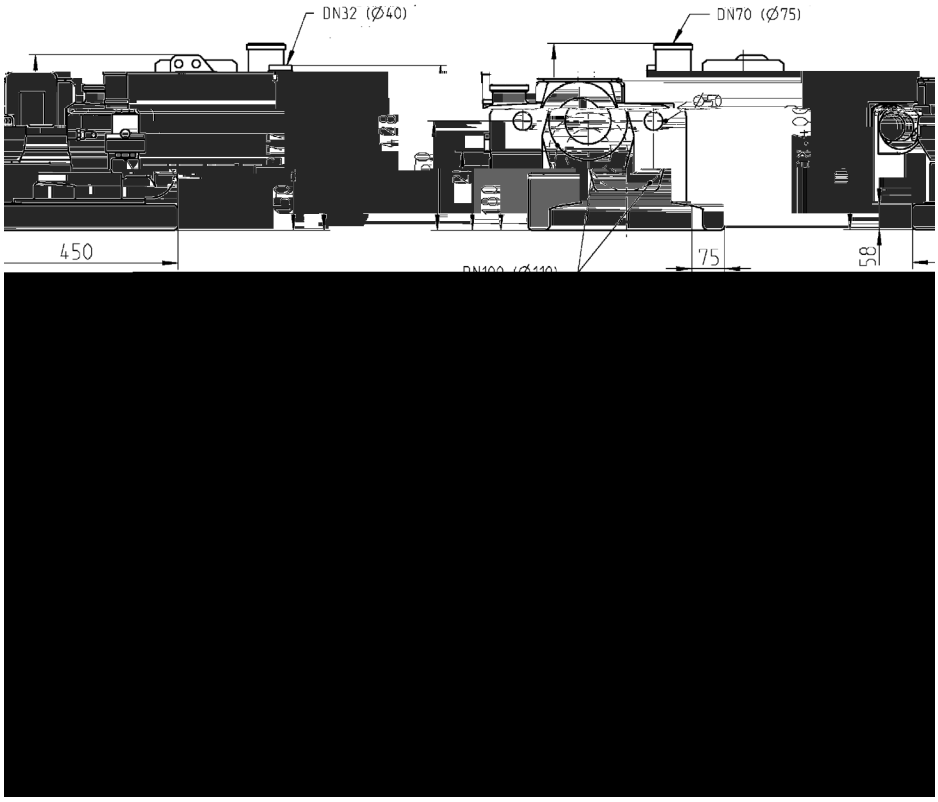

compli 300

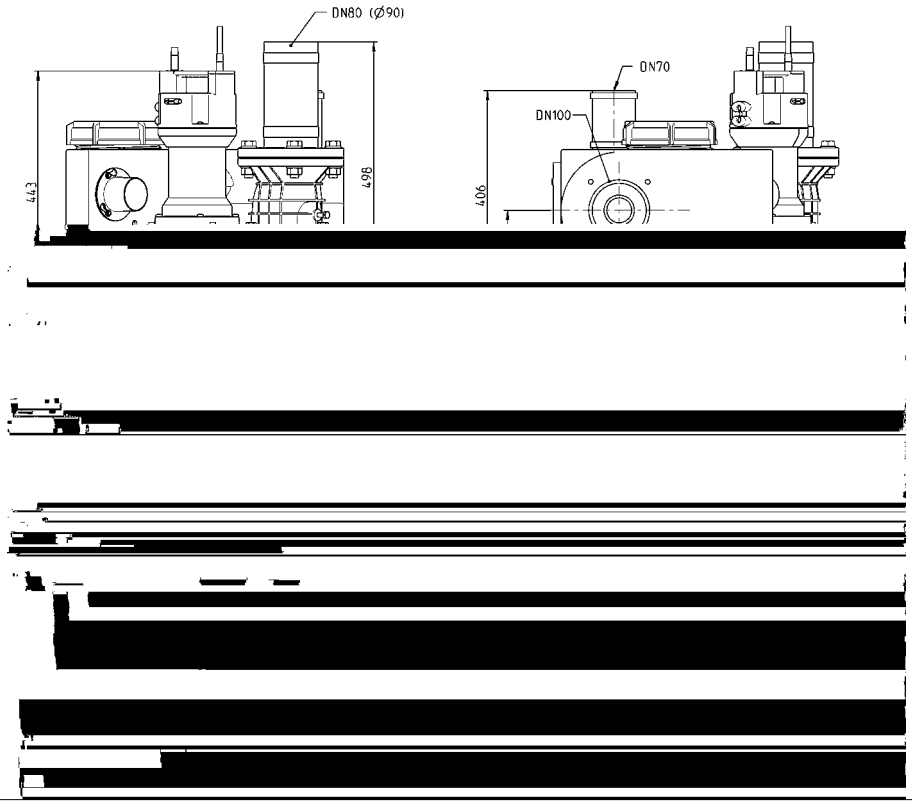

compli 400

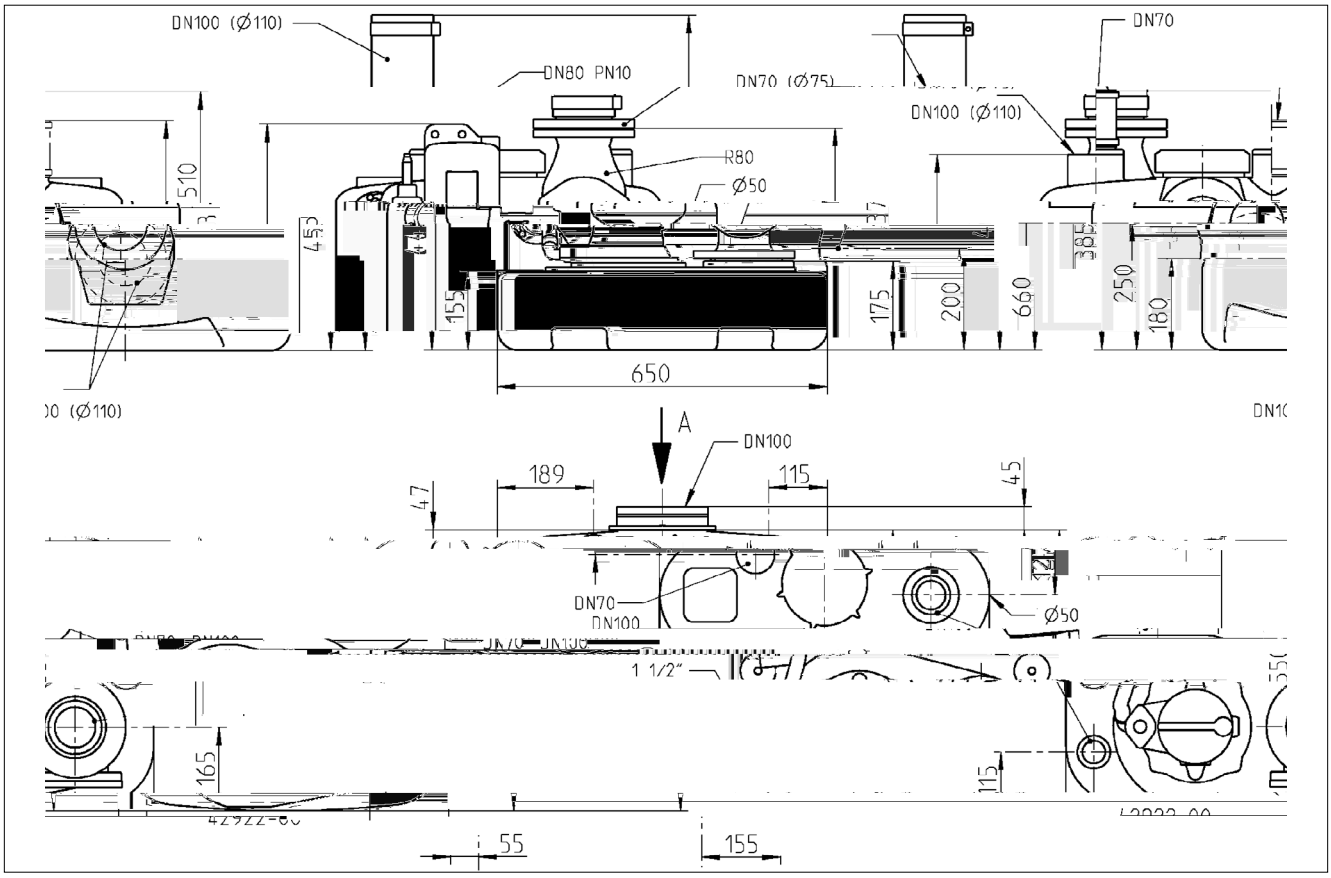

compli 500

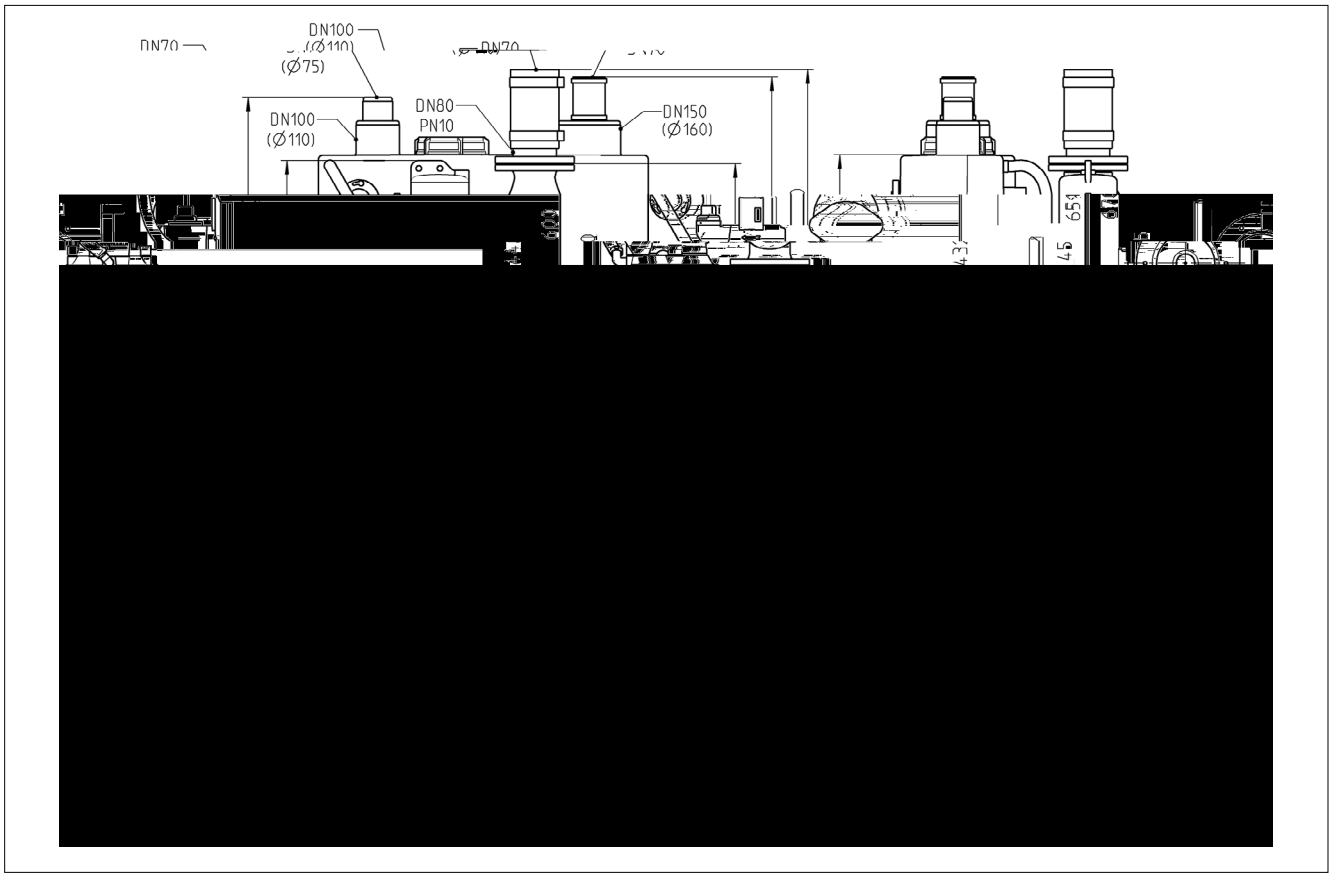

compli 500 M

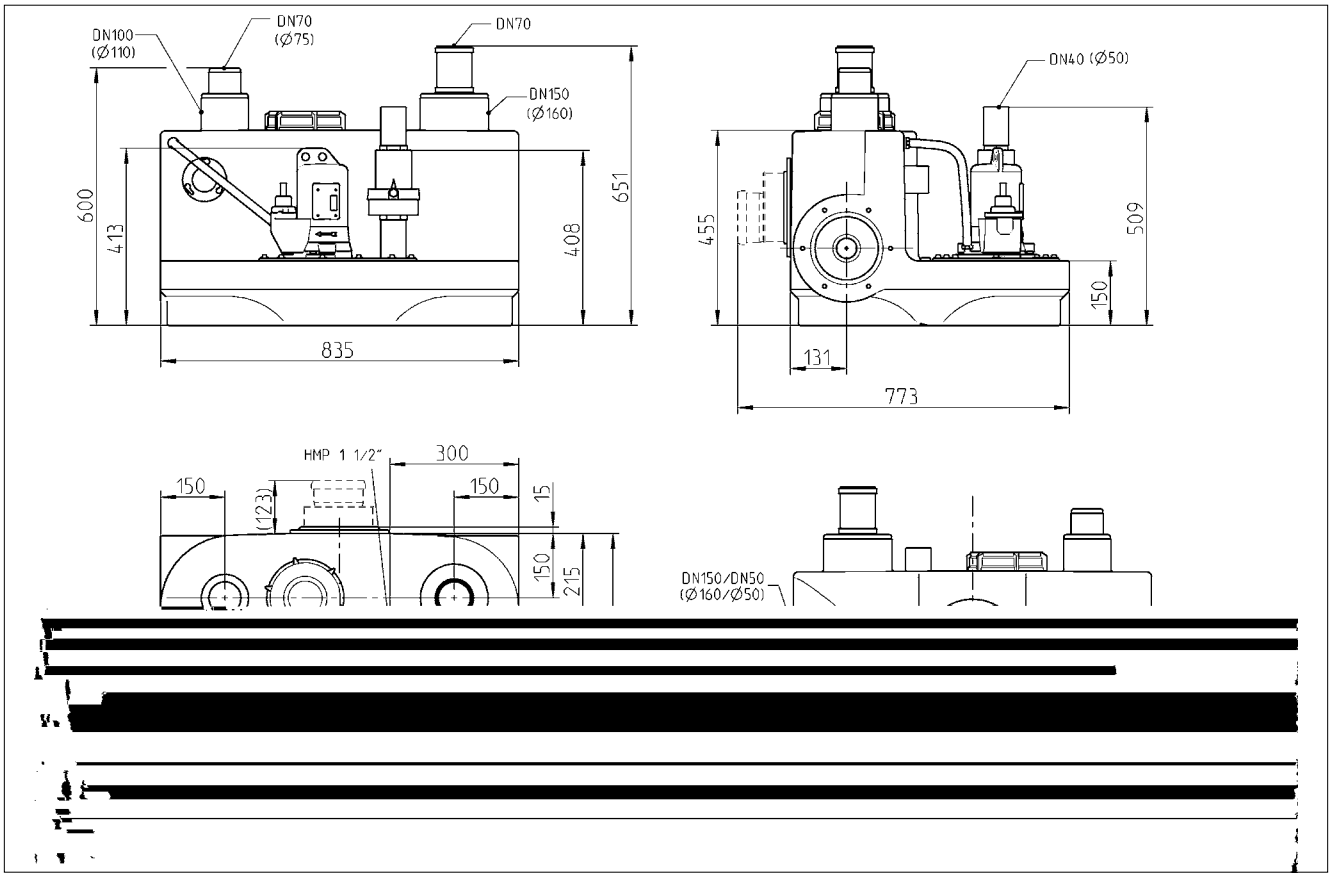

compli 1000

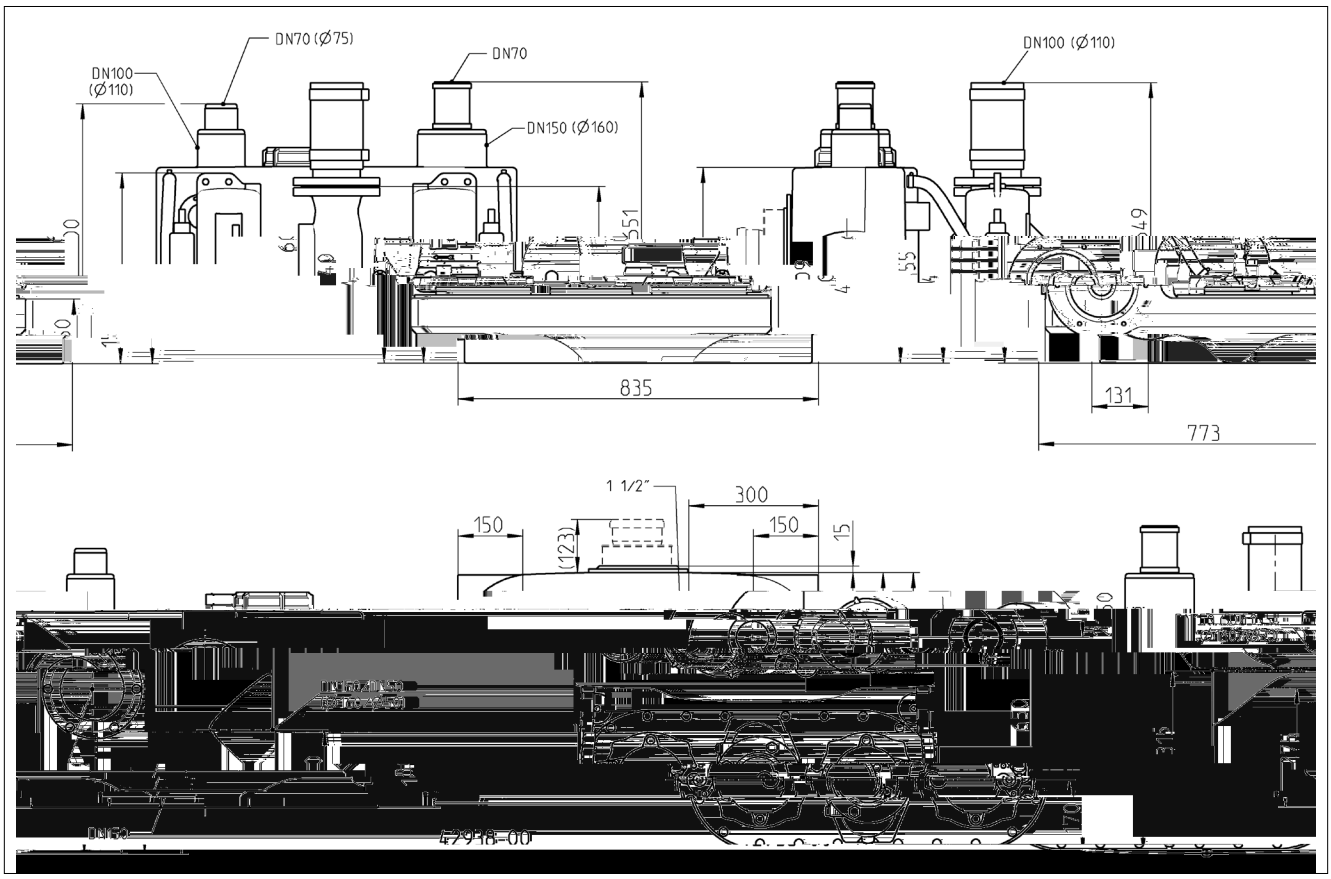

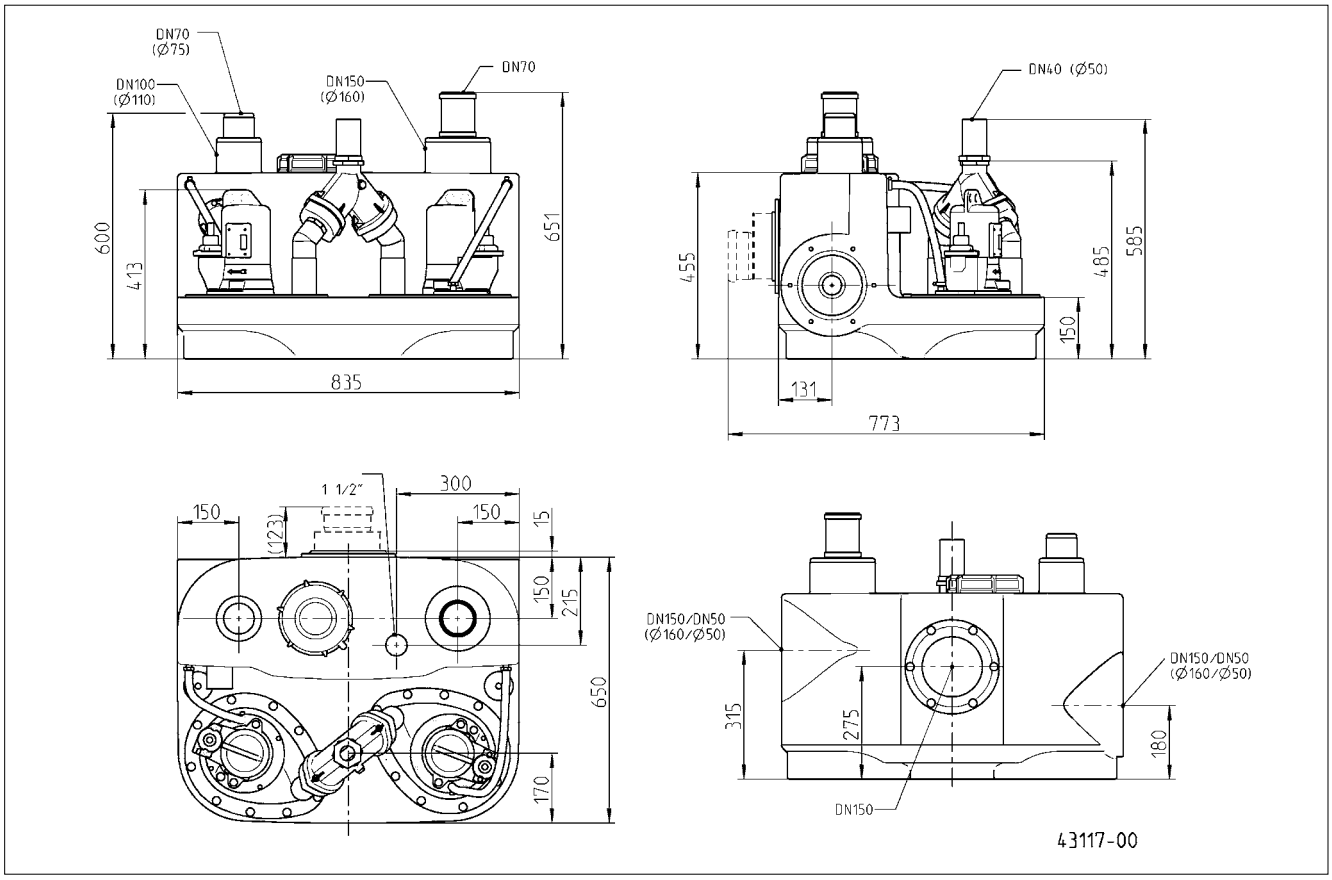
DN70
(Ø75)
DN100
(Ø110)
DN150
(Ø160)
DN70
600
413
651
835
DN40 (Ø50)
455
485
585
150
131
773
1 1/2"
300
150
(123)
150
15
150
215
650
170
DN150/DN50
(Ø160/Ø50)
315
275
DN150/DN50
(Ø160/Ø50)
180
DN150
43117-00

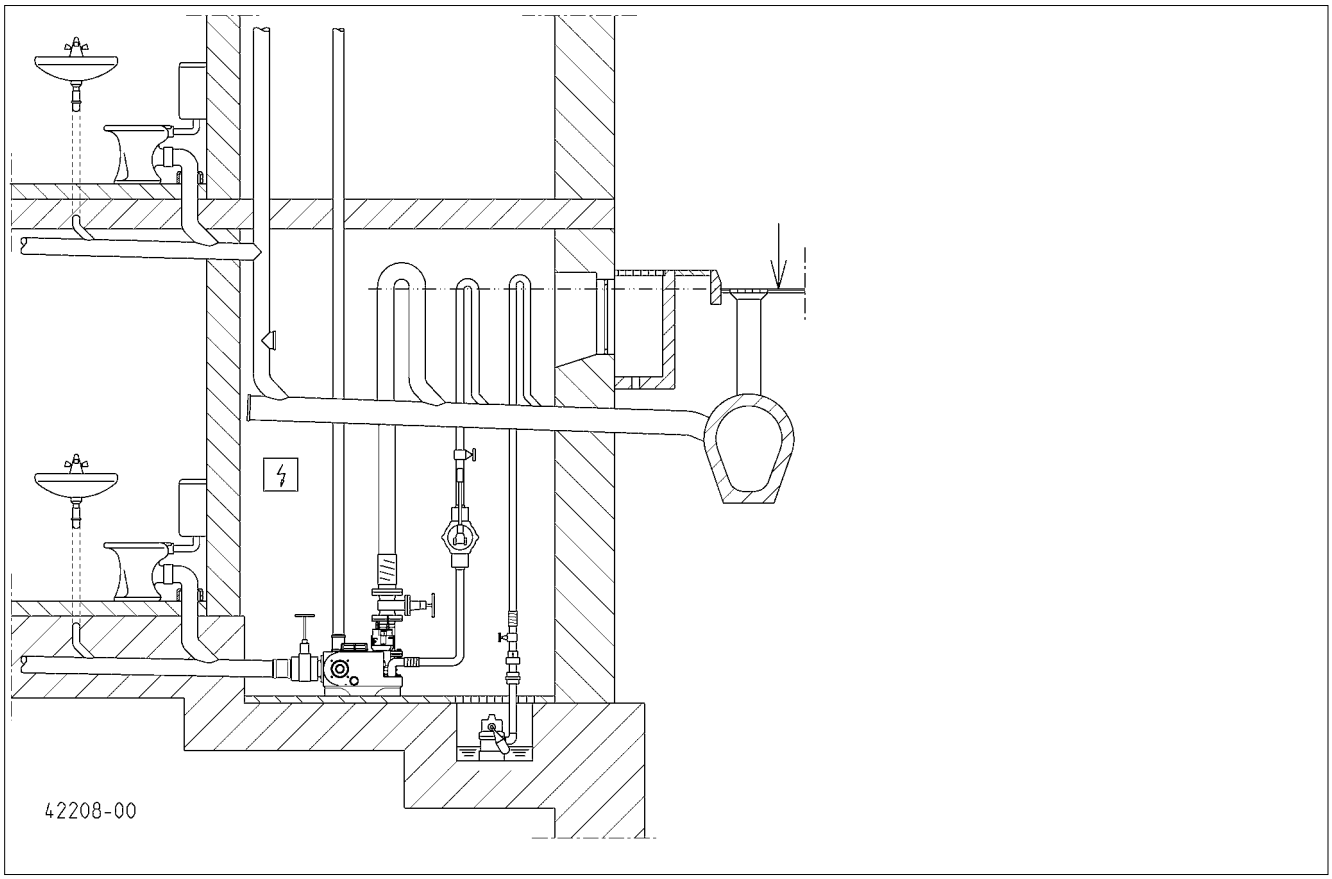
42208-00

		... 300 E	... 400 E	... 1010 BWE	... 400
	[kg]	29	55	118	56
	PN 10	DN 80	DN 80	DN 80	DN 80
	[ ]	50	70	70	70
	S3*	10 %	25 %	25 %	30 %
P1	[kW]	1,37	1,55	1,55	1,25
P2	[kW]	0,98	1,10	1,10	0,87
U	[V]	1/N/PE ~230	1/N/PE ~230	1/N/PE ~230	3/N/PE ~400
f	[H]	50	50	50	50
I	[A]	6,0	7,1	7,1	2,2
	[i -1]	2700	1428	1428	1390
			AD 69 ECP	BD 610 ECP	AD 00 P

		... 510/4 BW ... 1010/4 BW ... 1210/4 BW	... 515/4 BW ... 1015/4 BW ... 1215/4 BW	... 525/4 BW ... 1025/4 BW ... 1225/4 BW	... 525/2 BW ... 1025/2 BW ... 1225/2 BW	... 535/2 BW ... 1035/2 BW ... 1235/2 BW
	[kg]	66/118/118/145	66/118/118/145	66/118/118/145	68/120/122/149	72/125/131/158
	PN 10	DN 80	DN 80	DN 80	DN 80	DN 80
	[ ]	70	70	70	70	70
	S3*	45 %	30 %	15 %	25 %	25 %
P1	[kW]	1,3	2,2	3,0	3,3	4,8
P2	[kW]	1,0	1,7	2,2	2,6	4,0
U	[V]	3/N/PE ~400	3/N/PE ~400	3/N/PE ~400	3/N/PE ~400	3/N/PE ~400
f	[H]	50	50	50	50	50
I	[A]	2,8	3,9	5,1	5,4	7,8
	[i -1]	1451	1405	1363	2807	2857
		AD 25 P / BD 25 P	AD 46 P / BD 46 P	AD 46 P / BD 46 P	AD 46 P / BD 46 P	AD 610 P / BD 610 P

		... 108/2 ME ... 508/2 ME ... 1008/2 ME	... 108/2 M ... 508/2 M ... 1008/2 M	... 120/2 M ... 520/2 M ... 1020/2 M
	[kg]	42/50/77	41/49/75	43/51/79
	PN 10	DN 32/40/40	DN 32/40/40	DN 32/40/40
	[ ]	7	7	7
	S3*	10 %	35 %	25 %
P1	[kW]	1,70	1,65	2,30
P2	[kW]	1,14	1,24	1,85
U	[V]	1/N/PE ~230	3/N/PE ~400	3/N/PE ~400
f	[H]	50	50	50
I	[A]	7,5	2,8	3,9
	[i -1]	2584	2674	2860
		AD 08/2 MEP	AD 00 P / BD 00 P	AD 46 P / BD 46 P

* E [illegible] f 40%: 4[illegible] i . [illegible] a i [illegible] d 6[illegible] i . e [illegible] (C c e d a i [illegible] 10[illegible] i .);
E [illegible] : 40%: 4[illegible] i . di f [illegible] e [illegible] + 6[illegible] i . di[illegible] a (d a a de cic [illegible] 10[illegible] i .)
P k ad 40%: 4[illegible] i . [illegible] a 6[illegible] i . [illegible] e [illegible] ka [illegible] ac h c k 10[illegible] i .)
4[illegible] e c [illegible] 6[illegible] e c [illegible] e [illegible] (cik ī. 10[illegible] e c)

E [illegible] e: 40% = 4[illegible] i de e ice e [illegible] 6[illegible] i de[illegible] e (D e d je 10[illegible] i)
P k ad 40%: 4[illegible] i [illegible] ac i 6[illegible] i [illegible] e (C a c k 10[illegible] i);
P k ad 40%: 4[illegible] i [illegible] e d ka a 6[illegible] i [illegible] e [illegible] ka (d ba a ia c k 10[illegible] i);
E [illegible] 40%: 4[illegible] i f [illegible] c i a e i 6[illegible] i [illegible] a [illegible] (ul [illegible] a i 10[illegible] i)

Leistung - Performance - Puissances - Capaciteit - Prestazioni - Wydajności i moce - Výkony - Výkony - Teljesítmény - Capacități - 性能参数

H [m]	1	2	3	4	5	6	7	8	9	10	11	12	13	14	15	16	17
c[illegible]i 300 E	30	29	28	24	22	19	15							**Q [m³/h]**			
c[illegible]i 400 E	48	40	33	27	20	13											
c[illegible]i 1010 BWE	52	44	37	29	22	13											
c[illegible]i 400	48	40	33	27	20	13											
... 10/4 BW	52	44	37	29	22	13											
... 15/4 BW	69	62	56	49	42	36	27	19									
... 25/4 BW					56	49	42	32	22	13							
... 25/2 BW	69	64	58	52	47	42	37	33	28	23	20	14	8	1			
... 35/2 BW	85	80	75	71	66	62	57	54	50	47	44	39	36	33	30	26	21
... 08/2 ME		17		16		14		12		9		7		4			
... 08/2 M		17		16		14		12		9		7		4			
... 20/2 M								16		14		12		10		8	

compli 300

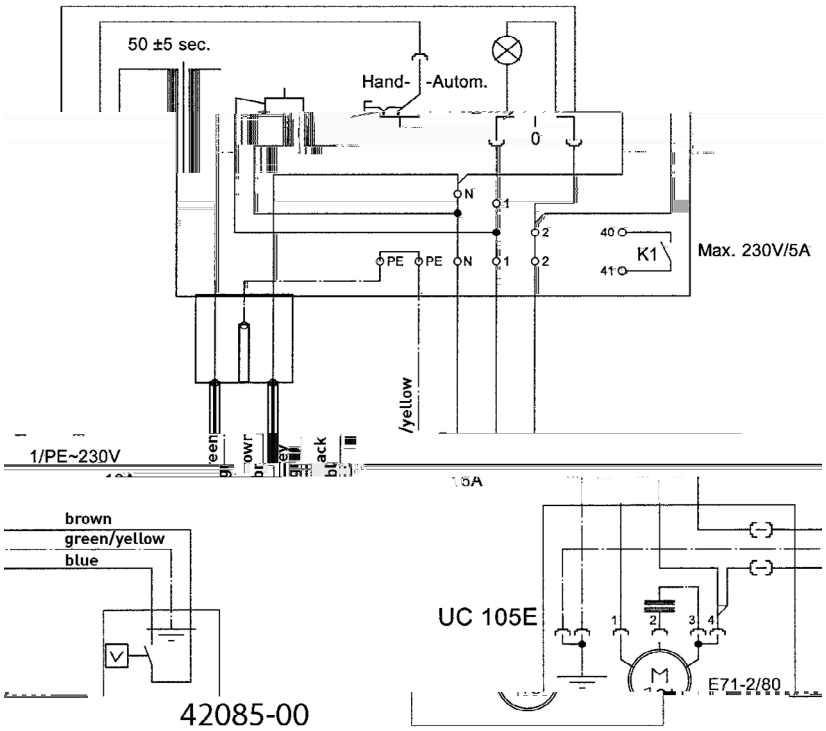

AD 69 ECP

Ei e a age - Si g e - U de c a de P e e - Rege aa a ee e ke dige i a a ie - C a d i g - S e ik i - a acji jed ej d c jed ka jed d ch a e - Riade ie h a iade ia - Eg edi be e de e je - Si de c a d i a a ie i di id a - 单泵系统

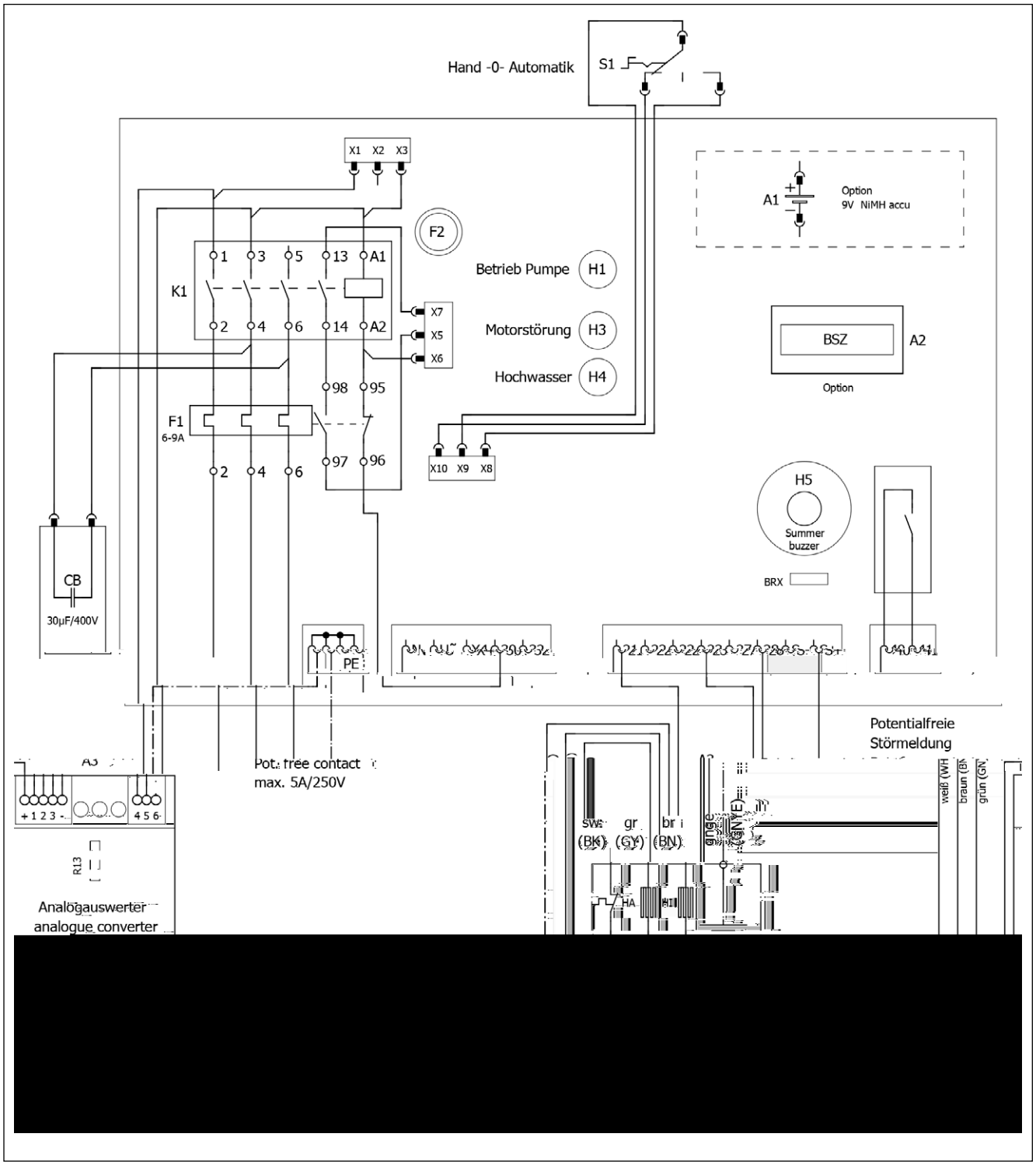

AD 08/2 MEP

Ei e a age - Si g e i - U i de c a de P e e - Rege aa a ee e ke dige i a a ie - C a d i g -S e ik i a acji jed ej d c jed ka jed d ch a e - Riade ie a h a iade ia - Eg edi be e de e je - Si de c a d i a a ie i di id a - 单泵系统

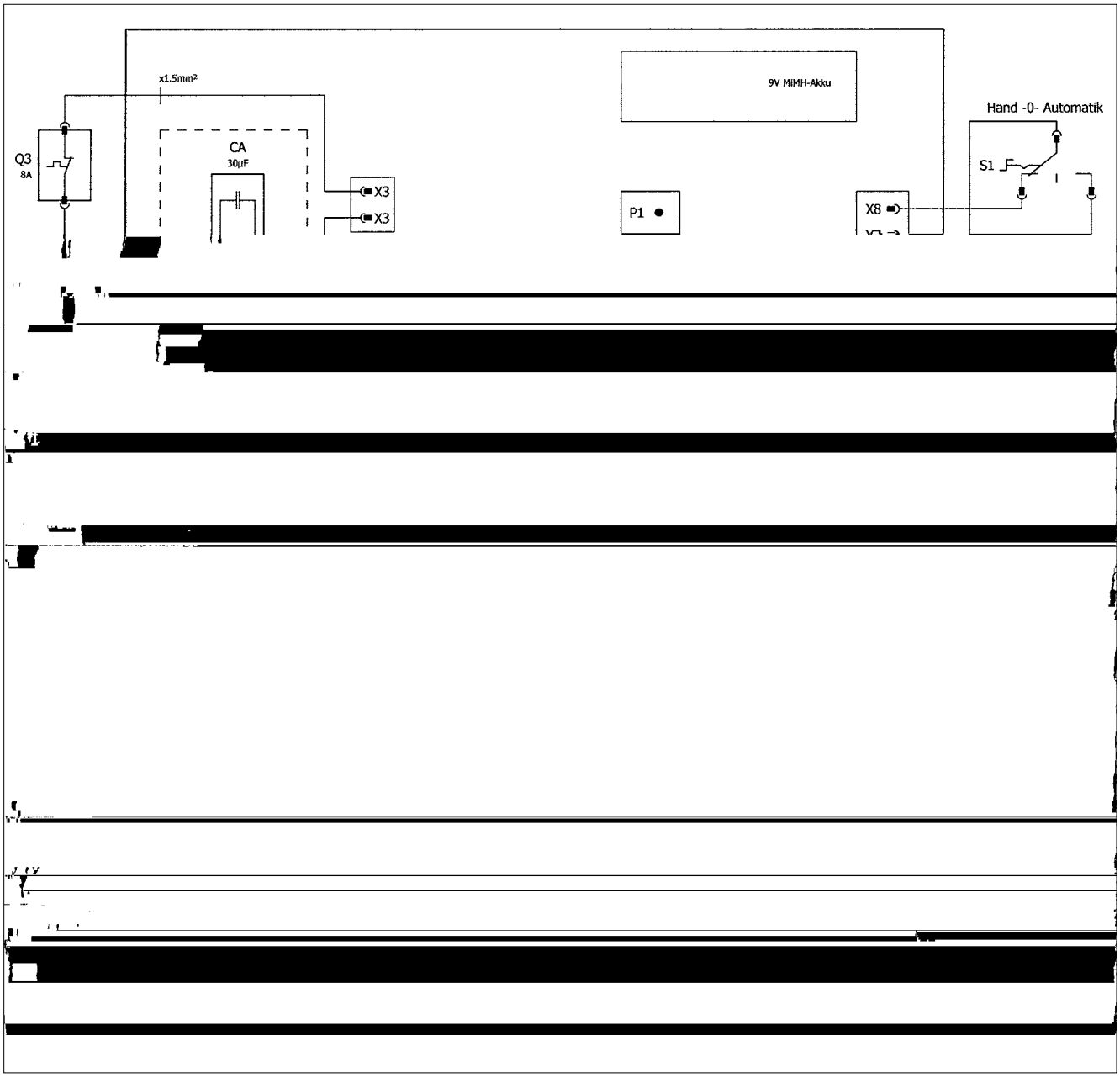

AD ... P

Ei e a age - Si g e i - U i de c a a de P e e - C a d i g - Rege aa a ee e ke dige i a a ie - S e ik i a acji jed ej d c jed ka jed d ch a e - Riade ie a a h a iade ia - Eg edi be e de e je - Si de c a a i a a ie i di id a - 单泵系统

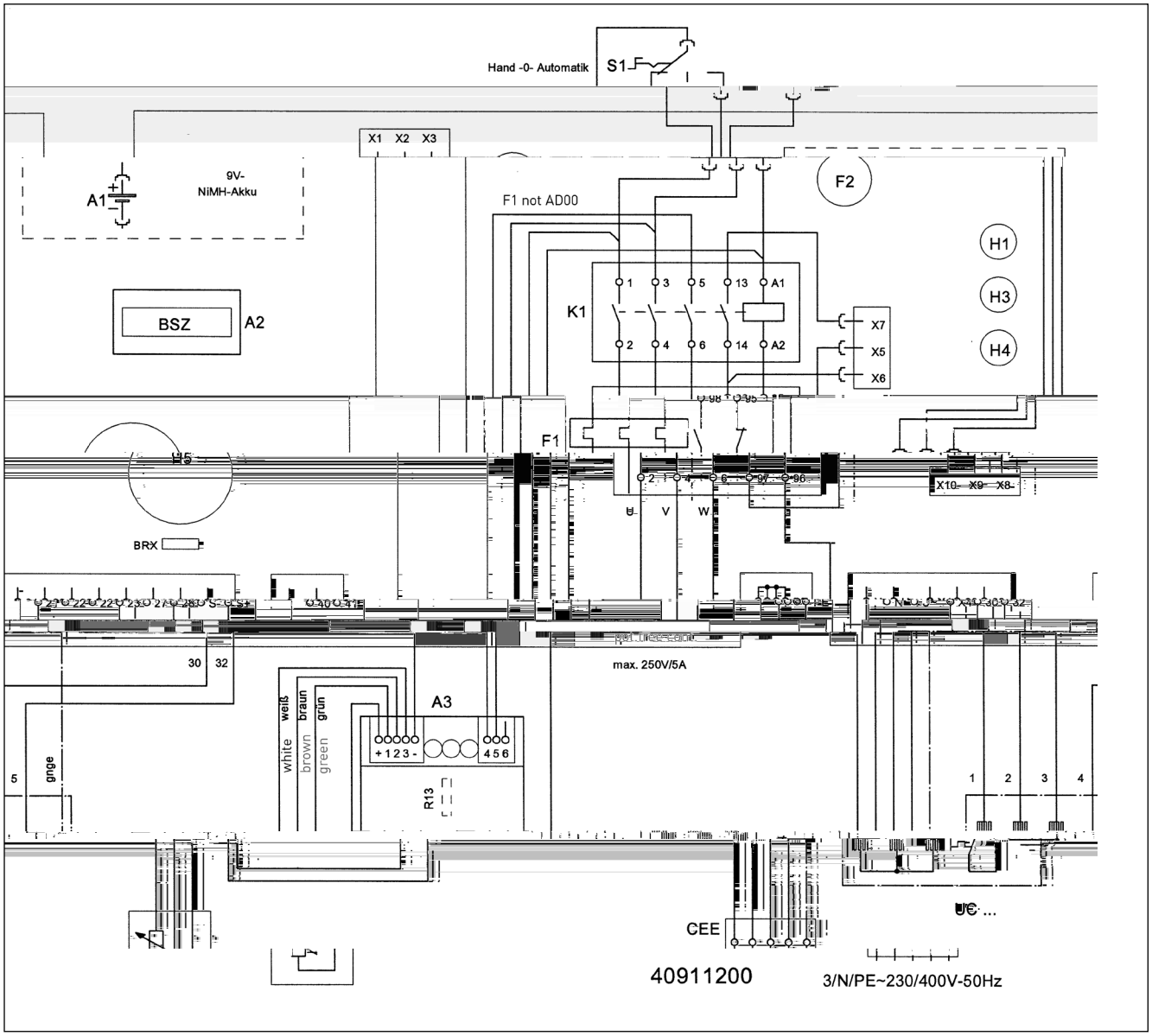

BD 610 ECP - compli 1008/2 ME

D [illegible] e a [illegible] age - D [illegible] - C [illegible] a [illegible] d [illegible] U [illegible] de c [illegible] a [illegible] de P [illegible] e d [illegible] b e - Rege aa [illegible] a [illegible] ee [illegible] d bbe e i [illegible] a [illegible] ie - C [illegible] a [illegible] d [illegible] - S [illegible] e [illegible] ik i [illegible] a acji d [illegible] ej [illegible] d c jed [illegible] ka d [illegible] ji [illegible] a [illegible] e [illegible] - Riade [illegible] ie d [illegible] ji [illegible] h [illegible] a iade [illegible] ia - Ke [illegible] be e [illegible] de [illegible] - Si [illegible] de c [illegible] a [illegible] d [illegible] i [illegible] a [illegible] ie d b [illegible] - 双泵系统

BD 610 ECP - compli 1010/4 BWE

D [illegible] e a [illegible] age - D [illegible] e [illegible] - U [illegible] de c [illegible] a de P [illegible] e d b e - C [illegible] a d d [illegible] - Rege aa a ee d bbe e i a a ie - S e ik i a acji d [illegible] ej [illegible] d c jed [illegible] ka d [illegible] a e - Riade ie d [illegible] h a iade ia - Ke [illegible] be e de - Si [illegible] de c [illegible] a [illegible] i a a ie d b [illegible] - 双泵系统

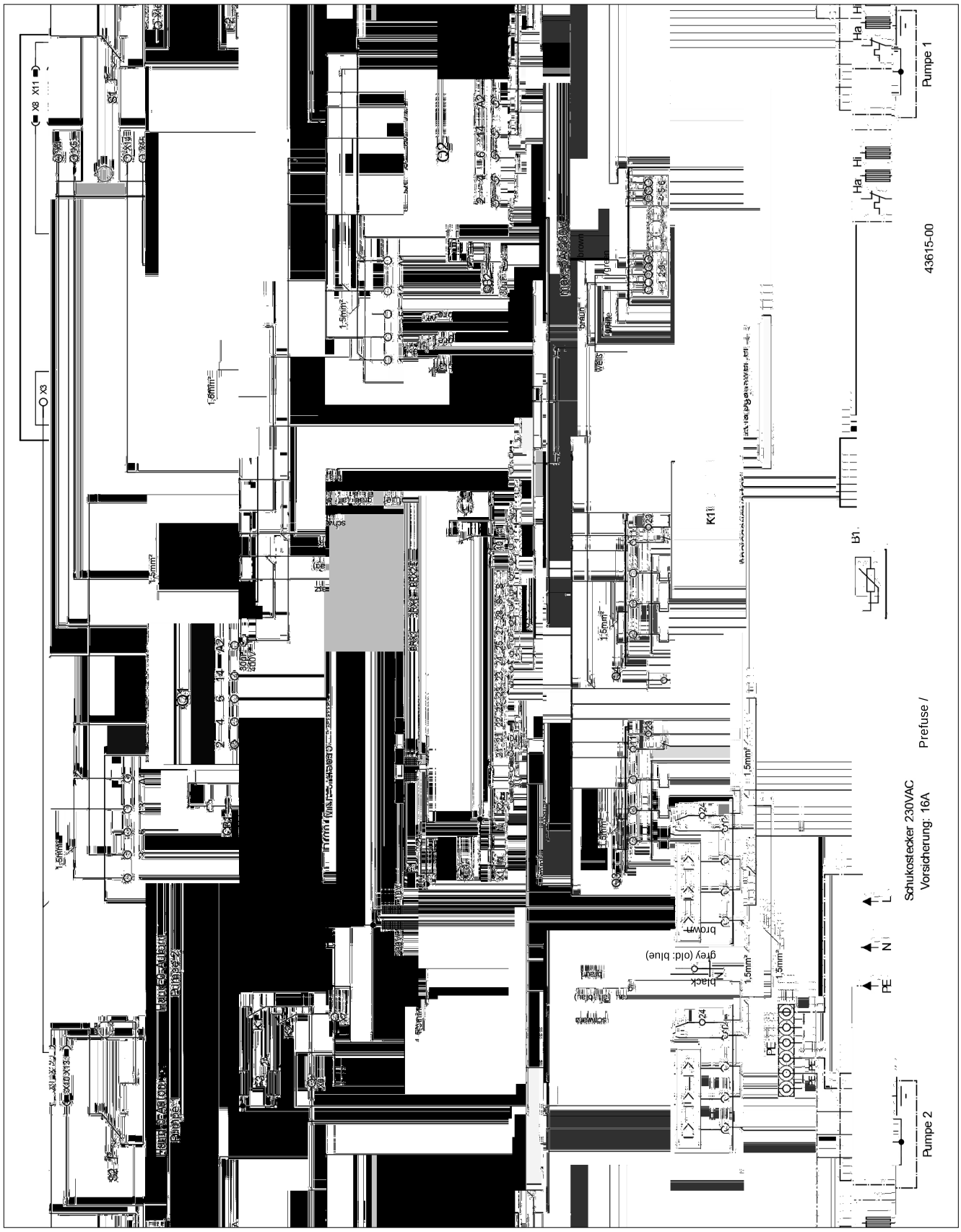

BD ... P

D [illegible] e a [illegible] age - D [illegible] e [illegible] - U [illegible] de c [illegible] a de P [illegible] e d [illegible] b e - C [illegible] a d d [illegible] - Rege aa a ee d bbe e i [illegible] a [illegible] ie - S [illegible] e [illegible] ik i [illegible] a acji d [illegible] ej [illegible] d c jed [illegible] ka d [illegible] ji [illegible] a e [illegible] - Riade ie d [illegible] ji [illegible] h [illegible] a iade ia - Ke [illegible] be e de [illegible] - Si [illegible] de c [illegible] a [illegible] i [illegible] a [illegible] ie d b [illegible] - 双泵系统

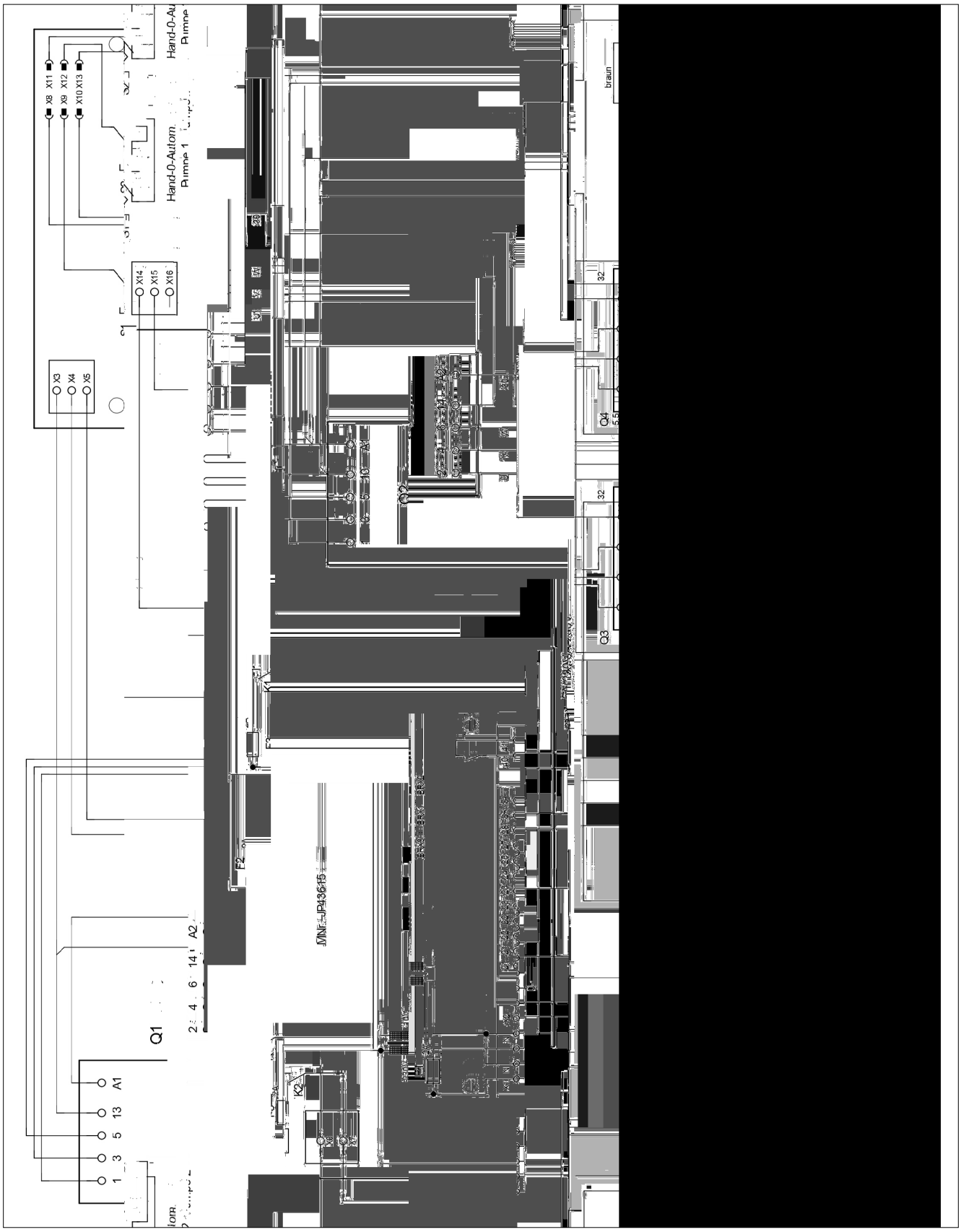

CE 0197

JUNG PUMPEN G bH - l d ie . 4-6 33803 S ei hage , Ge a

13

452.12.1509 - 453.12.1509

EN 12050-1:2001
Fäkalienhebeanlage

c i 108/2 ME (JP09347/5)
c i 108/2 M (JP09346/5)
c i 120/2 M (JP09877/5)
c i 300 E (JP09496/0)

c i 400 E (JP09770/5)
c i 400 (JP00637/9)
c i 400 E (JP09324/5)
c i 400 (JP09322/9)

c i 510/4 BW (JP09191/1)
c i 525/2 BW (JP09194/1)
c i 515/4 BW (JP09192/1)
c i 535/2 BW (JP09195/1)
c i 525/4 BW (JP09193/1)
c i 508/2 ME (JP43128/0)
c i 508/2 M (JP43129/0)
c i 520/2 M (JP43130/0)

c i 1010/4 BWE (JP09273/2)
c i 1025/2 BW (JP09461/1)
c i 1010/4 BW (JP09829/5)
c i 1035/2 BW (JP09462/1)
c i 1015/4 BW (JP09830/5)
c i 1008/2 ME (JP43131/0)
c i 1025/4 BW (JP09831/5)
c i 1008/2 M (JP43132/0)

CE 0197

JUNG PUMPEN G bH - l d ie . 4-6 33803 S ei hage , Ge a

13

452.12.1509 - 453.12.1509

EN 12050-1:2001
Station de relevage pour effluents contenant des matières fécales

c i 108/2 ME (JP09347/5)
c i 120/2 M (JP09877/5)
c i 300 E (JP09496/0)

c i 108/2 M (JP09346/5)

c i 400 E (JP09770/5)
c i 400 E (JP09324/5)

c i 400 (JP00637/9)
c i 400 (JP09322/9)

c i 510/4 BW (JP09191/1)
c i 515/4 BW (JP09192/1)
c i 525/4 BW (JP09193/1)
c i 508/2 M (JP43129/0)

c i 525/2 BW (JP09194/1)
c i 535/2 BW (JP09195/1)
c i 508/2 ME (JP43128/0)
c i 520/2 M (JP43130/0)

c i 1010/4 BWE (JP09273/2)
c i 1010/4 BW (JP09829/5)
c i 1015/4 BW (JP09830/5)
c i 1025/4 BW (JP09831/5)
c i 1020/2 M (JP43133/0)

c i 1025/2 BW (JP09461/1)
c i 1035/2 BW (JP09462/1)
c i 1008/2 ME (JP43131/0)
c i 1008/2 M (JP43132/0)

c i 1210/4 BW (JP09168/2)
c i 1215/4 BW (JP09169/2)
c i 1225/4 BW (JP09170/2)

c i 1225/2 BW (JP09171/2)
c i 1235/2 BW (JP09172/2)

C ec e e e age a i a i e de ea e e e de a i e f ca e e de ea e c e a de a i e f ca e a -de d i ea de ef e e.

R ACTION AU FEU	NPD
TANCH IT L EAU, TANCH IT L AIR	
- E a ch i ea	a i fai a
- a ch i a de	a i fai a
EFFICACIT (PERFORMANCE DE RELEVAGE)	
- Ref e de a i e ide	a i fai a
- Racc d de a	a i fai a
- Di e i i a e de c d i e da a i	a i fai a
- D bi i	a i fai a
- Pa age ib e i a de i a a i	a i fai a
- V e i e i a	a i fai a
R SISTANCE M CANIQUE	
- Ca aci de cha ge e abi i c e e d c - ec e e i i a i e ie de b e	NPD
- S abi i c e e d c ec e e i i a i i a ie de b e	a i fai a
NIVEAU SONORE	t 70 dB(A)
R SISTANCE	
- de a abi i c e e	a i fai a
- de a e f a ce de e e age	a i fai a
- de a i a ce ca i e	a i fai a
SUBSTANCES DANGEREUSES	NPD

CE 0197

JUNG PUMPEN G bH - l d ie . 4-6 33803 S ei hage , Ge a

13

452.12.1509 - 453.12.1509

EN 12050-1:2001
Stazione di sollevamento per acque reflue contenenti materiale fecale

i 108/2 ME (JP09347/5)	i 108/2 M (JP09346/5)
i 120/2 M (JP09877/5)	
i 300 E (JP09496/0)	
i 400 E (JP09770/5)	i 400 (JP00637/9)
i 400 E (JP09324/5)	i 400 (JP09322/9)
i 510/4 BW (JP09191/1)	i 525/2 BW (JP09194/1)
i 515/4 BW (JP09192/1)	i 535/2 BW (JP09195/1)
i 525/4 BW (JP09193/1)	i 508/2 ME (JP43128/0)
i 508/2 M (JP43129/0)	i 520/2 M (JP43130/0)
i 1010/4 BWE (JP09273/2)	i 1025/2 BW (JP09461/1)
i 1010/4 BW (JP09829/5)	i 1035/2 BW (JP09462/1)
i 1015/4 BW (JP09830/5)	i 1008/2 ME (JP43131/0)
i 1025/4 BW (JP09831/5)	i 1008/2 M (JP43132/0)
i 1020/2 M (JP43133/0)	
i 1210/4 BW (JP09168/2)	i 1225/2 BW (JP09171/2)
i 1215/4 BW (JP09169/2)	i 1235/2 BW (JP09172/2)
i 1225/4 BW (JP09170/2)	

Racc a e e a a ic diac e ef e i e di a e
feca i e diac e ef e c e e i a e feca i a di a de i e di
i ag

INFIAMMABILITÀ	NPD
IMPERMEABILITÀ, ERMETICITÀ ALL'ARIA	
- e eabi	S e a
- E e ici ag i d i	S e a
EFFICACIA (CAPACITÀ DI SOLLEVAMENTO)	
- P e aggi di a e ia i idi	S e a
- C ega e i a b	S e a
- Mi e i e de e i ee di e i a i e	S e a
- Ve ci di c e e i e a	S e a
- Pa aggi ibe i e i de e i a	S e a
- V e ie i e i	S e a
RESISTENZA MECCANICA	
- Ca aci di ca ic e abi a e de e ba i di acc a e e a di f i deg i edifici	NPD
- S abi a e de e ba i di acc a e a i e deg i edifici.	S e a
SOGLIA DI RUMOROSITÀ	t 70 dB(A)
DUREVOLEZZA	
- de a abi a e	S e a
- de a ca aci di e e	S e a
- de a e i e a ecca ica	S e a
SOSTANZE PERICOLOSE	NPD

CE 0197

JUNG PUMPEN G bH - l d ie . 4-6 33803 S ei hage , Ge a

13

452.12.1509 - 453.12.1509

EN 12050-1:2001
Spildevandsløfteanlæg

i 108/2 ME (JP09347/5)	i 108/2 M (JP09346/5)
i 120/2 M (JP09877/5)	
i 300 E (JP09496/0)	
i 400 E (JP09770/5)	i 400 (JP00637/9)
i 400 E (JP09324/5)	i 400 (JP09322/9)
i 510/4 BW (JP09191/1)	i 525/2 BW (JP09194/1)
i 515/4 BW (JP09192/1)	i 535/2 BW (JP09195/1)
i 525/4 BW (JP09193/1)	i 508/2 ME (JP43128/0)
i 508/2 M (JP43129/0)	i 520/2 M (JP43130/0)
i 1010/4 BWE (JP09273/2)	i 1025/2 BW (JP09461/1)
i 1010/4 BW (JP09829/5)	i 1035/2 BW (JP09462/1)
i 1015/4 BW (JP09830/5)	i 1008/2 ME (JP43131/0)
i 1025/4 BW (JP09831/5)	i 1008/2 M (JP43132/0)
i 1020/2 M (JP43133/0)	
i 1210/4 BW (JP09168/2)	i 1225/2 BW (JP09171/2)
i 1215/4 BW (JP09169/2)	i 1235/2 BW (JP09172/2)
i 1225/4 BW (JP09170/2)	

S i g a a i k f i g af de a d de f ka ie g de a d
ed f ka ie e e e i ea

BRANDADF RD	NPD
VANDT THED, LUFTT THED	
- Va d hed	Be e
- L hed	Be e
EFFEKTIVITET (L FTEVIRKNING)	
- P i g af fa e ffe	Be e
- R i ge	Be e
- Mi f e i a i ka a e	Be e
- Mi . f deha ighed	Be e
- A gge fie i ge ga g	Be e
- Mi . e e	Be e
MEKANISK STYRKE	
- S ebeh de e b ee e g k e e abi e i a e de e de f b g i ge	NPD
- S ebeh de e b ee e g k e e abi e i a e de e i b g i ge	Be e
ST JNIVEAU	t 70 dB(A)
HOLDBARHED	
- k e abi e	Be e
- f e i k i g	Be e
- eka i k k e	Be e
FARLIGE SUBSTANSER	NPD

CE 0197

JUNG PUMPEN G bH - l d ie . 4-6 33803 S ei hage , Ge a

13

452.12.1509 - 453.12.1509

EN 12050-1:2001
Fekalieuppfordringsanläggning

c i 108/2 ME (JP09347/5)
c i 108/2 M (JP09346/5)
c i 120/2 M (JP09877/5)
c i 300 E (JP09496/0)

c i 400 E (JP09770/5)
c i 400 (JP00637/9)
c i 400 E (JP09324/5)
c i 400 (JP09322/9)

c i 510/4 BW (JP09191/1)
c i 525/2 BW (JP09194/1)
c i 515/4 BW (JP09192/1)
c i 535/2 BW (JP09195/1)
c i 525/4 BW (JP09193/1)
c i 508/2 ME (JP43128/0)
c i 508/2 M (JP43129/0)
c i 520/2 M (JP43130/0)

c i 1010/4 BWE (JP09273/2)
c i 1025/2 BW (JP09461/1)
c i 1010/4 BW (JP09829/5)
c i 1035/2 BW (JP09462/1)
c i 1015/4 BW (JP09830/5)
c i 1008/2 ME (JP43131/0)
c i 1025/4 BW (JP09831/5)
c i 1008/2 M (JP43132/0)
c i 1020/2 M (JP43133/0)

c i 1210/4 BW (JP09168/2)
c i 1225/2 BW (JP09171/2)
c i 1215/4 BW (JP09169/2)
c i 1235/2 BW (JP09172/2)
c i 1225/4 BW (JP09170/2)

S i g ch a a i k d i g a feka ief i a e ch feka ieha igh a a e ia i bakaf de i

BRAND	NPD
VATTENTÄTHET, LUFTTÄTHET	
- Va e he	G dk d
- L k he	G dk d
VERKAN (UPPFORDRINGSVERKAN)	
- Ma i g a fa e	G dk d
- R a i ga	G dk d
- L g a e i a i ed i ga	G dk d
- L g a f de ha ighe	G dk d
- F i g a ge g i a gg i ge	G dk d
- L g a	G dk d
MEKANISK HÅLLFASTHET	
- B f ga ch i g beh a e k e a a-bi e f a d i g a f b gg ade	NPD
- S i g beh a e k e a abi e f a d-i g a f b gg ade	G dk d
BULLERNIVÅ	L 70 dB(A)
HÅLLBARHET	
- De k e a abi e e	G dk d
- f e ka	G dk d
- De eka i ka h fa he e	G dk d
FARLIGA SUBSTANSER	NPD

CE 0197

JUNG PUMPEN G bH - l d ie . 4-6 33803 S ei hage , Ge a

13

452.12.1509 - 453.12.1509

EN 12050-1:2001
Käymäläjäteveden nostolaite

c i 108/2 ME (JP09347/5)
c i 108/2 M (JP09346/5)
c i 120/2 M (JP09877/5)
c i 300 E (JP09496/0)

c i 400 E (JP09770/5)
c i 400 (JP00637/9)
c i 400 E (JP09324/5)
c i 400 (JP09322/9)

c i 510/4 BW (JP09191/1)
c i 525/2 BW (JP09194/1)
c i 515/4 BW (JP09192/1)
c i 535/2 BW (JP09195/1)
c i 525/4 BW (JP09193/1)
c i 508/2 ME (JP43128/0)
c i 508/2 M (JP43129/0)
c i 520/2 M (JP43130/0)

c i 1010/4 BWE (JP09273/2)
c i 1025/2 BW (JP09461/1)
c i 1010/4 BW (JP09829/5)
c i 1035/2 BW (JP09462/1)
c i 1015/4 BW (JP09830/5)
c i 1008/2 ME (JP43131/0)
c i 1025/4 BW (JP09831/5)
c i 1008/2 M (JP43132/0)
c i 1020/2 M (JP43133/0)

c i 1210/4 BW (JP09168/2)
c i 1225/2 BW (JP09171/2)
c i 1215/4 BW (JP09169/2)
c i 1235/2 BW (JP09172/2)
c i 1225/4 BW (JP09170/2)

Ha aa j e ede ja e a i j e ede ke i e ja a - aa i e i e akai i a a e a

KÄYTTÄYTYMINEN TULIPALOSSA	NPD
VESITIIVIYS, ILMATIIVIYS	
- Ve i i	H k
- Haj i i	H k
TEHO (NOSTOVAIKUTUS)	
- Kii eide ai eide a	H k
- P ki i i	H k
- I a j h je hi i i a	H k
- V hi i i a e	H k
- Lai ei a a hi i i e	H k
- V hi i h i a	H k
MEKAANINEN KESTÄVYYS	
- Ke i i i ka a ja ake ee i e aka k - ake e e k e a	NPD
- Ke i i i ake ee i e aka k ake - e i	H k
MELUTASO	L 70 dB(A)
KESTÄVYYS	
- Rake ee i e aka	H k
- N aik	H k
- Mekaa i e j	H k
VAARALLISET AINEET	NPD

CE 0197

JUNG PUMPEN G bH - l d ie . 4-6 33803 S ei hage , Ge a

13

452.12.1509 - 453.12.1509

EN 12050-1:2001
Instalacja przepompowni fekaliów

c i 108/2 ME (JP09347/5)
c i 108/2 M (JP09346/5)
c i 120/2 M (JP09877/5)
c i 300 E (JP09496/0)

c i 400 E (JP09770/5)
c i 400 (JP00637/9)
c i 400 E (JP09324/5)
c i 400 (JP09322/9)

c i 510/4 BW (JP09191/1)
c i 525/2 BW (JP09194/1)
c i 515/4 BW (JP09192/1)
c i 535/2 BW (JP09195/1)
c i 525/4 BW (JP09193/1)
c i 508/2 ME (JP43128/0)
c i 508/2 M (JP43129/0)
c i 520/2 M (JP43130/0)

c i 1010/4 BWE (JP09273/2)
c i 1025/2 BW (JP09461/1)
c i 1010/4 BW (JP09829/5)
c i 1035/2 BW (JP09462/1)
c i 1015/4 BW (JP09830/5)
c i 1008/2 ME (JP43131/0)
c i 1025/4 BW (JP09831/5)
c i 1008/2 M (JP43132/0)

CE 0197

JUNG PUMPEN G bH - l d ie . 4-6 33803 S ei hage , Ge a

13

452.12.1509 - 453.12.1509

EN 12050-1:2001
Čerpacie stanice odpadových vôd s obsahom fekálnych splaškov

c i 108/2 ME (JP09347/5)
c i 108/2 M (JP09346/5)
c i 120/2 M (JP09877/5)
c i 300 E (JP09496/0)

c i 400 E (JP09770/5)
c i 400 (JP00637/9)
c i 400 E (JP09324/5)
c i 400 (JP09322/9)

c i 510/4 BW (JP09191/1)
c i 525/2 BW (JP09194/1)
c i 515/4 BW (JP09192/1)
c i 535/2 BW (JP09195/1)
c i 525/4 BW (JP09193/1)
c i 508/2 ME (JP43128/0)
c i 508/2 M (JP43129/0)
c i 520/2 M (JP43130/0)

c i 1010/4 BWE (JP09273/2)
c i 1025/2 BW (JP09461/1)
c i 1010/4 BW (JP09829/5)
c i 1035/2 BW (JP09462/1)
c i 1015/4 BW (JP09830/5)
c i 1008/2 ME (JP43131/0)
c i 1025/4 BW (JP09831/5)
c i 1008/2 M (JP43132/0)
c i 1020/2 M (JP43133/0)

c i 1210/4 BW (JP09168/2)
c i 1225/2 BW (JP09171/2)
c i 1215/4 BW (JP09169/2)
c i 1235/2 BW (JP09172/2)
c i 1225/4 BW (JP09170/2)

Zbe a a ick e a ie d ad ch d be fek ch a d ad ch d b ah fek ch a k ed c e d ia

REAKCIA PO AS PO IARU	NPD
VODOTESNOS , VZDUCHOTESNOS	
- d e	i adk
- ach be e	i adk
INNOS INOK SANIA)	
- d a a e ch a c	i adk
- b j k	i adk
- i e e e ac ch ede	i adk
- i a ch ie k	i adk
- i iech d	i adk
- i k bj	i adk
MECHANICK PEVNOS	
- a k a abi i a be ej d b e a ie b d	NPD
- k a abi i a be ej d b e a ie ci b d	i adk
HLADINA HLUKU	70 dB (A)
TRVANLIVOS	
- k ej abi i	i adk
- ed aj ch i k	i adk
- echa ickej e i	i adk
NEBEZPE N L TKY	NPD

CE 0197

JUNG PUMPEN G bH - l d ie . 4-6 33803 S ei hage , Ge a

13

452.12.1509 - 453.12.1509

EN 12050-1:2001
Fekáliatartalmú szennyvizek átemelői

c i 108/2 ME (JP09347/5)
c i 108/2 M (JP09346/5)
c i 120/2 M (JP09877/5)
c i 300 E (JP09496/0)

c i 400 E (JP09770/5)
c i 400 (JP00637/9)
c i 400 E (JP09324/5)
c i 400 (JP09322/9)

c i 510/4 BW (JP09191/1)
c i 525/2 BW (JP09194/1)
c i 515/4 BW (JP09192/1)
c i 535/2 BW (JP09195/1)
c i 525/4 BW (JP09193/1)
c i 508/2 ME (JP43128/0)
c i 508/2 M (JP43129/0)
c i 520/2 M (JP43130/0)

c i 1010/4 BWE (JP09273/2)
c i 1025/2 BW (JP09461/1)
c i 1010/4 BW (JP09829/5)
c i 1035/2 BW (JP09462/1)
c i 1015/4 BW (JP09830/5)
c i 1008/2 ME (JP43131/0)
c i 1025/4 BW (JP09831/5)
c i 1008/2 M (JP43132/0)
c i 1020/2 M (JP43133/0)

c i 1210/4 BW (JP09168/2)
c i 1225/2 BW (JP09171/2)
c i 1215/4 BW (JP09169/2)
c i 1235/2 BW (JP09172/2)
c i 1225/4 BW (JP09170/2)

Fek ia e e fek ia a e g j e e- e a i d i fe e

VISELKED S Z ESET N	NPD
V Z L L S G, L G TERESZT S	
- V g	Megfe e
- S a e e g	Megfe e
HAT KONYS G (EMEL HAT S)	
- S i d a ag k a	Megfe e
- C c a ak k	Megfe e
- A e e e kek i i e ei	Megfe e
- A i i i ebe ge	Megfe e
- A be e de abad i i e e e	Megfe e
- Mi i ha e	Megfe e
MECHANIKAI SZIL RDS G	
- A g j a e he he ge k i abi i - a e eke k i ha a h	NPD
- A g j a k i abi i a e eke be i ha a h	Megfe e
ZAJSZINT	70 dB(A)
TART SS G	
- a k i abi i a ga	Megfe e
- a e ha a ga	Megfe e
- a echa ikai i d g a ga	Megfe e
VESZ LYES ANYAGOK	NPD

CE 0197

JUNG PUMPEN G bH - l d ie . 4-6 33803 S ei hage , Ge a

13

452.12.1509 - 453.12.1509

EN 12050-1:2001
Stație de pompare ape uzate cu materii fecale

c i 108/2 ME (JP09347/5)	c i 108/2 M (JP09346/5)
c i 120/2 M (JP09877/5)	
c i 300 E (JP09496/0)	
c i 400 E (JP09770/5)	c i 400 (JP00637/9)
c i 400 E (JP09324/5)	c i 400 (JP09322/9)
c i 510/4 BW (JP09191/1)	c i 525/2 BW (JP09194/1)
c i 515/4 BW (JP09192/1)	c i 535/2 BW (JP09195/1)
c i 525/4 BW (JP09193/1)	c i 508/2 ME (JP43128/0)
c i 508/2 M (JP43129/0)	c i 520/2 M (JP43130/0)
c i 1010/4 BWE (JP09273/2)	c i 1025/2 BW (JP09461/1)
c i 1010/4 BW (JP09829/5)	c i 1035/2 BW (JP09462/1)
c i 1015/4 BW (JP09830/5)	c i 1008/2 ME (JP43131/0)
c i 1025/4 BW (JP09831/5)	c i 1008/2 M (JP43132/0)
c i 1020/2 M (JP43133/0)	
c i 1210/4 BW (JP09168/2)	c i 1225/2 BW (JP09171/2)
c i 1215/4 BW (JP09169/2)	c i 1235/2 BW (JP09172/2)
c i 1225/4 BW (JP09170/2)	

C ec a ea i a ea a a de a e a e i feca e i a e a e c a e i feca e dea a i e a a ibi a a e di i de ca a i a e

COMPORTAMENTUL N CAZ DE INCENDIU	NPD
IMPERMEABILITATE LA AP , ETAN EITATE LA AER	
- eabi i a e a a	Re i
- E a i ei a e a i i	Re i
EFICACITATE (EFICIEN , DE POMPARE)	
- T a de a e ia e ide	Re i
- Rac d i ea	Re i
- Di e i i e a e c d c e de e i a e	Re i
- Vi e a de c ge e i	Re i
- T ece ea i ibe a i a a iei	Re i
- Ca aci a e i i abi i	Re i
REZISTEN A MECANIC	
- Ca aci a ea a i abi i a ea c a a e e - i c ec e e i i a ea afa a c di i	NPD
- S abi i a ea c a a e e i c ec e e i i a ea i e i c di i	Re i
NIVEL DE ZGOMOT	t 70 dB(A)
DURABILITATEA	
- S abi i a ea c a	Re i
- Eficie de a e	Re i
- Re i e a eca i	Re i
SUBSTAN E PERICULOASE	NPD

PENTAIR **JUNG PUMPEN**

EU-Konformitätserklärung
EU-Prohlášeni o shodě
EU-Overensstemmelseserklæring
EU-Declaration of Conformity
EU-Vaatimustenmukaisuusvakuutus
EU-Déclaration de Conformité
EU-Megfelelőségi nyilatkozat
EU-Dichiarazione di conformità
EU-Conformiteitsverklaring
EU-Deklaracja zgodności
EU-Declarație de conformitate
EU-Vyhlásenie o zhode
EU-Försäkran om överensstämmelse

DE · Richtlinien - Harmonisierte Normen
CS · Směrnice - Harmonizované normy
DA · Direktiv - Harmoniseret standard
EN · Directives - Harmonised standards
FI · Direktiivi - Yhdenmukaistettu standardi
FR · Directives - Normes harmonisées
HU · Irányelve - Harmonizá szabványok
IT · Direttive - Norme armonizzate
NL · Richtlijnen - Geharmoniseerde normen
PL · Dyrektywy - Normy zharmonizowane
RO · Directivă - Norme coroborate
SK · Smernice - Harmonizované normy
SV · Direktiv - Harmoniserade normer

• **2006/42/EG**	(MD)	**EN 809:1998/AC:2010, EN ISO 12100:2010, EN 60335-1:2012/AC:2014**
• **2011/65/EU**	(RoHS)	
• **2014/30/EU**	(EMC)	**EN 55014-1:2006/A2:2011, EN 55014-2:1997/A2:2008, EN 61000-3-2:2014, EN 61000-3-3:2013**
• **2014/34/EU**	(ATEX)	**EN 1127-1:2011**

JUNG PUMPEN GmbH - Industriestr. 4-6 - 33803 Steinhagen - Germany - www.jung-pumpen.de

DE · Wir erklären in alleiniger Verantwortung, dass das Produkt den aufgeführten Richtlinien entspricht.
CS · Prohlašujeme na svou výlučnou odpovědnost, že výrobek odpovídá jmenovaným směrnicím.
DA · Vi erklærer under ansvar at produktet i overensstemmelse med de retningslinjer
EN · We hereby declare, under our sole responsibility, that the product is in accordance with the specified Directives.
FI · Me vakuutamme omalla vastuullamme, että tuote täyttää ohjeita.
FR · Nous déclarons sous notre propre responsabilité que le produit répond aux directives.
HU · Kizárólagos felelősségünk tudatában kijelentjük, hogy ez a termék megfelel az Európai Unió fentnevezett irányelveinek.
IT · Noi dichiariamo sotto la nostra esclusiva responsabilità che il prodotto è conforme alle direttive citate
NL · Wij verklaren geheel onder eigen verantwoordelijkheid dat het product voldoet aan de gestelde richtlijnen.
PL · Z pełną odpowiedzialnością oświadczamy, że produkt odpowiada postanowieniom wymienionych dyrektyw.
RO · Declarăm pe proprie răspundere că produsul corespunde normelor prevăzute de directivele mai sus menționate.
SK · Na výlučnú zodpovednosť vyhlasujeme, že výrobok spíňa požiadavky uvedených smerníc.
SV · Vi försäkrar att produkten på vårt ansvar är utförd enligt gällande riktlinjer.

compli 300 E (JP09496/0)

compli 400 E (JP09770/5)
compli 400 E (JP09324/5)
compli 400 (JP00637/9)
compli 400 (JP09322/9)

compli 510/4 BW (JP09191/1)
compli 515/4 BW (JP09192/1)
compli 525/4 BW (JP09193/1)
compli 525/2 BW (JP09194/1)
compli 535/2 BW (JP09195/1)

compli 108/2 ME (JP09347/5)
compli 108/2 M (JP09346/5)
compli 120/2 M (JP09877/5)
compli 508/2 ME (JP43128/0)
compli 508/2 M (JP43129/0)
compli 520/2 M (JP43130/0)

DE · Weitere normative Dokumente CS · Jinými normativními dokumenty DA · Andre normative dokumenter EN · Other normative documents FI · Muiden normien FR · Autres documents normatifs HU · Egyéb szabályozó dokumentumokban leírtaknak IT · Altri documenti normativi NL · Verdere normatieve documenten PL · Innymi dokumentami normatywnymi RO · Alte acte normative SV · Vidare normerande dokument SK · Iným záväzným dokumentom:

EN 50274:2002/AC:2009,
EN 60335-2-41:2003/A2:2010,
TRBS 2153, CLC/TR 50404

DE · Bevollmächtigter für technische Dokumentation CS · Oprávněná osoba pro technickou dokumentaci DA · Autoriseret person for teknisk dokumentation EN · Authorized person for technical documentation FI · Valtuutettu henkilö tekninen dokumentaatio FR · Personne autorisée à la documentation technique HU · Hivatalos személy műszaki dokumentáció IT · Persona abilitata per la documentazione tecnica NL · Bevoegd persoon voor technische documentatie PL · Pełnomocnik ds. dokumentacji technicznej RO · Persoană autorizată pentru documentatiei tehnice SV · Auktoriserad person för teknisk dokumentation SK · Oprávnená osoba pre technickú dokumentáciu:

JUNG PUMPEN - Stefan Sirges - Industriestr. 4-6 - 33803 Steinhagen

Steinhagen, 10-01-2017

Stefan Sirges, General Manager

i.V.
Rüdiger Rokohl, Sales Manager

CE 352-13-1701

PENTAIR **JUNG PUMPEN**

EU-Konformitätserklärung
EU-Prohlášeni o shodě
EU-Overensstemmelseserklæring
EU-Declaration of Conformity
EU-Vaatimustenmukaisuusvakuutus
EU-Déclaration de Conformité
EU-Megfelelőségi nyilatkozat
EU-Dichiarazione di conformità
EU-Conformiteitsverklaring
EU-Deklaracja zgodności
EU-Declarație de conformitate
EU-Vyhlásenie o zhode
EU-Försäkran om överensstämmelse

DE · Richtlinien - Harmonisierte Normen
CS · Směrnice - Harmonizované normy
DA · Direktiv - Harmoniseret standard
EN · Directives - Harmonised standards
FI · Direktiivi - Yhdenmukaistettu standardi
FR · Directives - Normes harmonisées
HU · Irányelve - Harmonizá szabványok
IT · Direttive - Norme armonizzate
NL · Richtlijnen - Geharmoniseerde normen
PL · Dyrektywy - Normy zharmonizowane
RO · Directivă - Norme coroborate
SK · Smernice - Harmonizované normy
SV · Direktiv - Harmoniserade normer

• **2006/42/EG**	(MD)	**EN 809:1998/AC:2010, EN ISO 12100:2010, EN 60335-1:2012/AC:2014**
• **2011/65/EU**	(RoHS)	
• **2014/30/EU**	(EMC)	**EN 55014-1:2006/A2:2011, EN 55014-2:1997/A2:2008, EN 61000-3-2:2014, EN 61000-3-3:2013**
• **2014/34/EU**	(ATEX)	**EN 1127-1:2011**

JUNG PUMPEN GmbH - Industriestr. 4-6 - 33803 Steinhagen - Germany - www.jung-pumpen.de

DE · Wir erklären in alleiniger Verantwortung, dass das Produkt den aufgeführten Richtlinien entspricht.
CS · Prohlašujeme na svou výlučnou odpovědnost, že výrobek odpovídá jmenovaným směrnicím.
DA · Vi erklærer under ansvar at produktet i overensstemmelse med de retningslinjer
EN · We hereby declare, under our sole responsibility, that the product is in accordance with the specified Directives.
FI · Me vakuutamme omalla vastuullamme, että tuote täyttää ohjeita.
FR · Nous déclarons sous notre propre responsabilité que le produit répond aux directives.
HU · Kizárólagos felelősségünk tudatában kijelentjük, hogy ez a termék megfelel az Európai Unió fentnevezett irányelveinek.
IT · Noi dichiariamo sotto la nostra esclusiva responsabilità che il prodotto è conforme alle direttive citate
NL · Wij verklaren geheel onder eigen verantwoordelijkheid dat het product voldoet aan de gestelde richtlijnen.
PL · Z pełną odpowiedzialnością oświadczamy, że produkt odpowiada postanowieniom wymienionych dyrektyw.
RO · Declarăm pe proprie răspundere că produsul corespunde normelor prevăzute de directivele mai sus menționate.
SK · Na výlučnú zodpovednosť vyhlasujeme, že výrobok spíňa požiadavky uvedených smerníc.
SV · Vi försäkrar att produkten på vårt ansvar är utförd enligt gällande riktlinjer.

compli 1010/4 BWE (JP09273/2)
compli 1010/4 BW (JP09829/5)
compli 1015/4 BW (JP09830/5)
compli 1025/4 BW (JP09831/5)
compli 1025/2 BW (JP09461/1)
compli 1035/2 BW (JP09462/1)
compli 1008/2 ME (JP43131)
compli 1008/2 M (JP43132)
compli 1020/2 M (JP43133)
compli 1210/4 BW (JP09168/2)
compli 1215/4 BW (JP09169/2)
compli 1225/4 BW (JP09170/2)
compli 1225/2 BW (JP09171/2)
compli 1235/2 BW (JP09172/2)
compli 1525/4 C1 (JP09181/1)
compli 1535/4 C1 (JP09182/1)
compli 1555/4 C5 (JP09183/1)
compli 1575/4 C5 (JP09184/1)
compli 1575/4 B6 (JP09185/1)
compli 1535/2 B2 (JP45933)
compli 1555/2 B2 (JP45934)
compli 1575/2 B5 (JP45141/1)
compli 15100/2 B5 (JP45142/1)
compli 15200/2 B6 (JP45935)
compli 2525/4 C1 (JP09186/1)
compli 2535/4 C1 (JP09187/1)
compli 2555/4 C5 (JP09188/1)
compli 2575/4 C5 (JP09189/1)
compli 2575/4 B6 (JP09190/1)
compli 2535/2 B2 (JP45936)
compli 2555/2 B2 (JP45937)
compli 2575/2 B5 (JP45938)
compli 25100/2 B5 (JP45939)
compli 25200/2 B6 (JP45940)

DE · Weitere normative Dokumente CS · Jinými normativními dokumenty DA · Andre normative dokumenter EN · Other normative documents FI · Muiden normien FR · Autres documents normatifs HU · Egyéb szabályozó dokumentumokban leírtaknak IT · Altri documenti normativi NL · Verdere normatieve documenten PL · Innymi dokumentami normatywnymi RO · Alte acte normative SV · Vidare normerande dokument SK · Iným záväzným dokumentom:

EN 50274:2002/AC:2009,
EN 60335-2-41:2003/A2:2010,
TRBS 2153, CLC/TR 50404

DE · Bevollmächtigter für technische Dokumentation CS · Oprávněná osoba pro technickou dokumentaci
DA · Autoriseret person for teknisk dokumentation EN · Authorized person for technical documentation
FI · Valtuutettu henkilö tekninen dokumentaatio FR · Personne autorisée à la documentation technique
HU · Hivatalos személy műszaki dokumentáció IT · Persona abilitata per la documentazione tecnica
NL · Bevoegd persoon voor technische documentatie PL · Pełnomocnik ds. dokumentacji technicznej
RO · Persoană autorizată pentru documentatiei tehnice SV · Auktoriserad person för teknisk dokumentation SK · Oprávnená osoba pre technickú dokumentáciu:

JUNG PUMPEN - Stefan Sirges - Industriestr. 4-6 - 33803 Steinhagen

Steinhagen, 10-01-2017

Stefan Sirges, General Manager

i.V. Rüdiger Rokohl, Sales Manager

CE 353-14-1701

JUNG PUMPEN GmbH - Industrie Str. 4-6 - 33803 Steinhagen - Deutschland
Tel. +49 5204 170 - Fax +49 5204 80368 - eMail info@jung-pumpen.de

PENTAIR WATER ITALY S.r.l. - Via Marconi, 13 - 56010 Lugnano - Pisa - Italia
Tel. +39 050 716 111 - Fax +39 050 716 801 - eMail: info@jung-pumpen.it

PENTAIR WATER POLSKA Sp. z o.o. - ul. Przemysłowa 21 - 41-200 Sosnowiec - Polska
Tel. +48 32 295 1200 - Fax +48 32 295 1201 info@jung-pumpen.pl